SW13

AMP

Pic.	
M8	4
	4

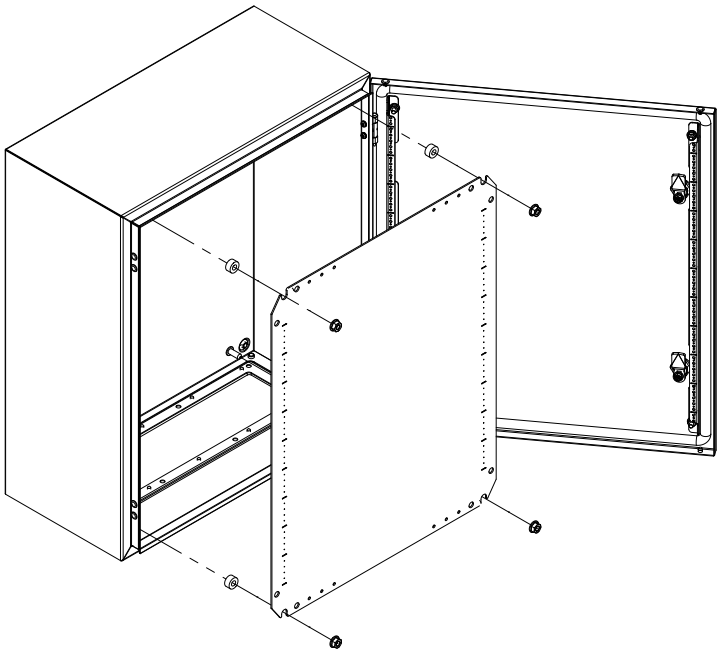

Fixing material in General Kit.

SW13

AMP

Pic.	
M8	4
	4

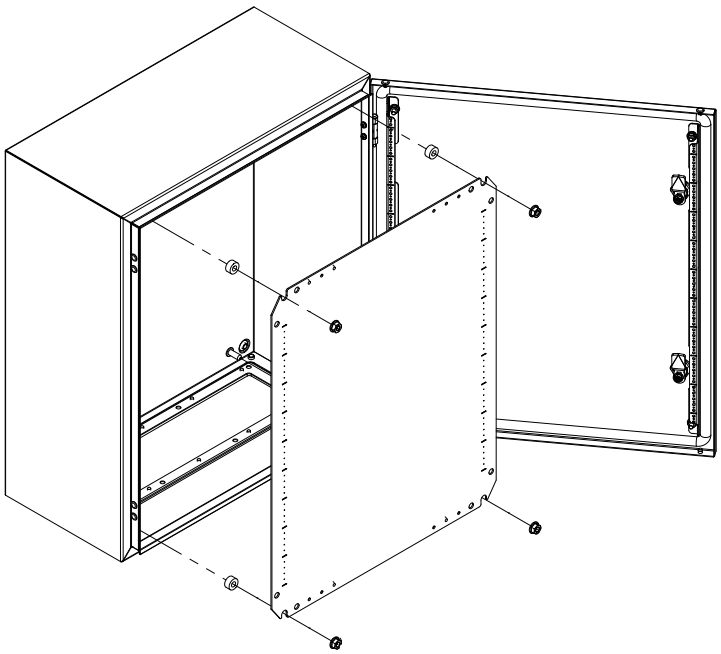

Fixing material in General Kit.

9885-0392-18 rev.1