Inductive sensor
BI10-G28-AZ3

Industrial Automation

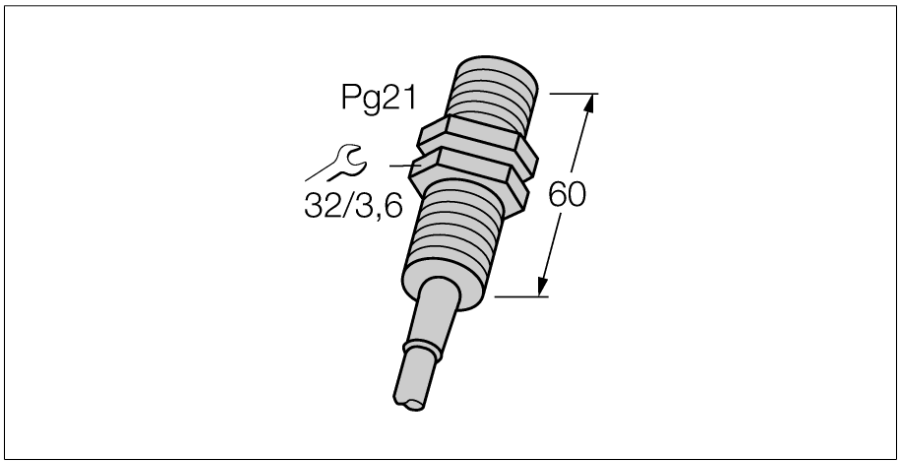

- **Threaded barrel, PG21**
- **Chrome-plated brass**
- **AC 2-wire, 20…250 VAC**
- **2-wire DC, 10…300 VDC**
- **NO contact**
- **Cable connection**

Wiring diagram

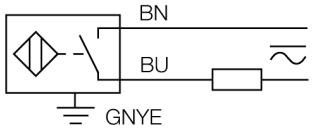

Type code	BI10-G28-AZ3
Ident no.	13061
Rated operating distance Sn	10 mm
Mounting condition	flush
Assured sensing range	≤ (0,81 x Sn) mm
Correction factors	St37 = 1; Al = 0.3; stainless steel = 0.7; Ms = 0.4
Repeatability	≤ 2 % of full scale
Temperaturdrift	10 %
Hysteresis	3…15 %
Ambient temperature	-25…+70 °C
Operating voltage	20…250 VAC
Operating voltage	10…300VDC
AC rated operational current	≤ 400 mA
DC rated operational current	≤ 300 mA
Frequency	≥ 50…≤ 60 Hz
Residual current	≤ 1.7 mA
Rated insulation voltage	≤ 1.5 kV
Surge current	≤ 8 A (≤ 10 ms max. 5 Hz)
Voltage drop at I_e	≤ 6 V
Output function	2-wire, NO contact
Smallest operating current I_m	≤ 3 mA
Switching frequency	0.02 kHz
Design	threaded barrel, PG21
Dimensions	60 mm
Housing material	metal, CuZn, chrome-plated
Material active face	Plastic, PA
End cap	Plastic, Trogamid T
Max. tightening torque housing nut	90 Nm
Connection	cable
Cable quality	5.2 mm, LifYY, PVC, 2 m
Cable cross section	3 x 0.34 mm^2
Vibration resistance	55 Hz (1 mm)
Shock resistance	30 g (11 ms)
Protection class	IP67
MTTF	2283 years acc. to SN 29500 (Ed. 99) 40 °C

Functional principle

Inductive sensors detect metal objects contactless and wear-free. For this, they use a high-frequency electromagnetic AC field that interacts with the target. Inductive sensors generate this field via an RLC circuit with a ferrite coil.

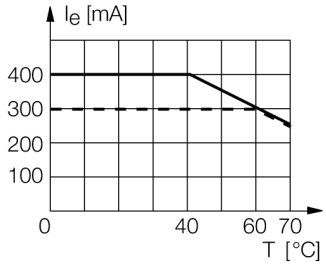

Edition • 2013-12-21T02:24:23+01:00

 Hans Turck GmbH & Co.KG • D-45472 Mülheim an der Ruhr • Witzlebenstraße 7 • Tel. 0208 4952-0 • Fax 0208 4952-264 • more@turck.com • www.turck.com

Distance D	2 x B
Distance W	3 x Sn
Distance T	3 x B
Distance S	1.5 x B
Distance G	6 x Sn
Diameter of the active area B	Ø 28 mm

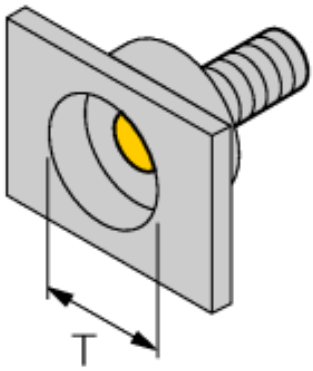

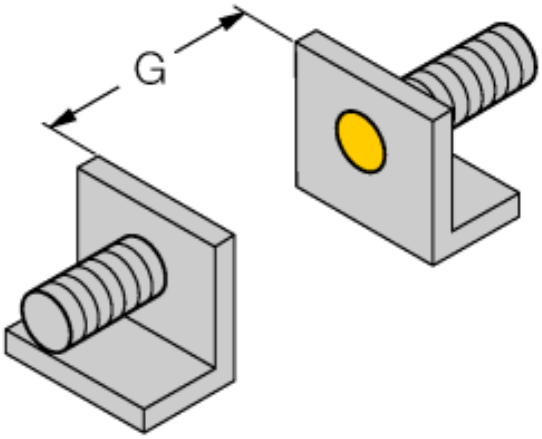

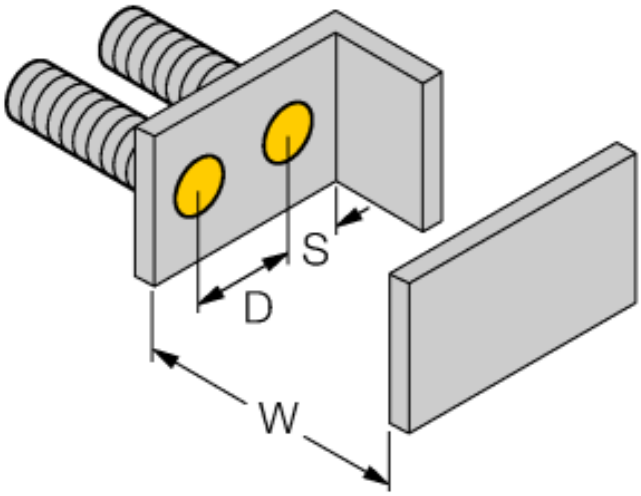

Edition • 2013-12-21T02:24:23+01:00

 Hans Turck GmbH & Co.KG • D-45472 Mülheim an der Ruhr • Witzlebenstraße 7 • Tel. 0208 4952-0 • Fax 0208 4952-264 • more@turck.com • www.turck.com