Product datasheet
Characteristics

XS8C4A1NCP20
inductive sensor XS8 40x40x117 - PBT - Sn20 mm - 12..48VDC - terminals

Main

Range of product	OsiSense XS
Series name	General purpose
Sensor type	Inductive proximity sensor
Device application	Mobile equipment
Sensor name	XS8
Sensor design	Form 40 x 40 x 117
Size	117 mm
Body type	Fixed
Detector flush mounting acceptance	Flush mountable
Material	Plastic
Enclosure material	PBT
Type of output signal	Discrete
Wiring technique	4-wire
[Sn] nominal sensing distance	20 mm
Discrete output function	1 NO + 1 NC
Output circuit type	DC
Discrete output type	NPN
Electrical connection	Screw-clamp terminals, 4 x 1.5 mm²
[Us] rated supply voltage	12...48 V DC with reverse polarity protection
Switching capacity in mA	<= 200 mA with overload and short-circuit protection
IP degree of protection	IP67 conforming to IEC 60529 IP65 conforming to IEC 60529 IP69K conforming to DIN 40050

Complementary

Detection face	5 positions turret head
Front material	PBT

Disclaimer: This documentation is not intended as a substitute for and is not to be used for determining suitability or reliability of these products for specific user applications

Operating zone	0…16 mm
Differential travel	3...15% of Sr
Repeat accuracy	<= 3% of Sr
Cable entry number	1 tapped entry for M20 x 1.5 cable gland
Status LED	Supply on: 1 LED (green) Output state: 1 LED (yellow)
Supply voltage limits	10…58 V DC
Switching frequency	<= 300 Hz
Maximum voltage drop	<2 V (closed)
Current consumption	0...15 mA no-load
Maximum delay first up	7.5 ms
Maximum delay response	1.2 ms
Maximum delay recovery	1.8 ms
Marking	CE
Height	40 mm
Length	40 mm
Width	117 mm
Product weight	0.244 kg

Environment

Product certifications	CCC E2 CSA UL
Ambient air temperature for operation	-25…70 °C
Ambient air temperature for storage	-40…85 °C
Vibration resistance	25 gn amplitude = +/- 2 mm (f = 10…55 Hz) conforming to IEC 60068-2-6
Shock resistance	50 gn for 11 ms conforming to EN 60068-2-27

Offer Sustainability

Sustainable offer status	Green Premium product
REACh Regulation	REACh Declaration
EU RoHS Directive	Pro-active compliance (Product out of EU RoHS legal scope) EU RoHS Declaration
Mercury free	Yes
RoHS exemption information	Yes
Environmental Disclosure	Product Environmental Profile
Circularity Profile	No need of specific recycling operations

Contractual warranty

Warranty	18 months

XS8C4A1NCP20

Dimensions

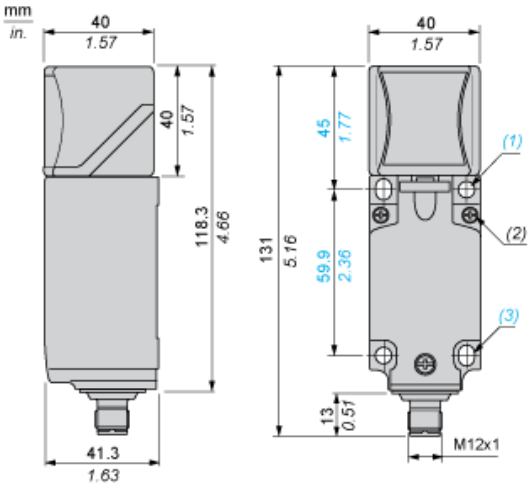

(1) 2 holes Ø 5,45 mm / Ø 0.21 in. (Tightening torque: < 1,5 Nm / < 13.3 lb-in.)
(2) 3 screws M3,5. (Tightening torque: < 1,2 Nm / < 10.6 lb-in.)
(3) 2 elongated holes 5,4 x 7,4 mm / 0.21 x 0.29 in. (Tightening torque: < 1,5 Nm / < 13.3 lb-in.)

Mounting

Head Positions

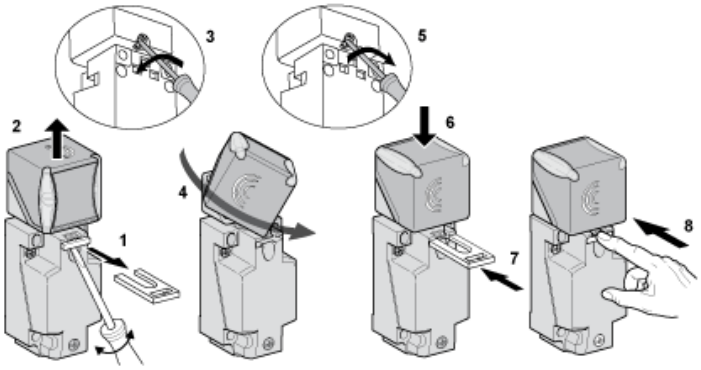

XS8C4A1NCP20

Setting-up Precautions

Minimum Mounting Distances (mm)

Side by Side

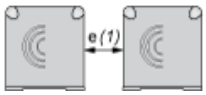

e (1) ≥ 80

Face to Face

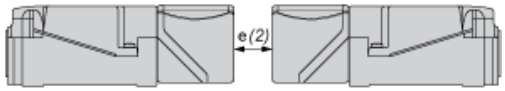

e (2) ≥ 160

Facing a Metal Object

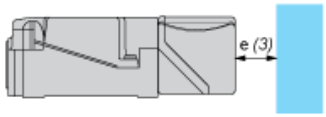

e (3) ≥ 60

Wiring Schemes
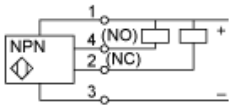
4-Wire DC