© Siemens AG 2017

Selection and ordering data

Operating values at rated power																	Aluminum series 1LE1003 – IE3 version in accordance with IEC 60034-30 Article No.			
P_{rated}, 50 Hz/ P50	P_{rated}, 60 Hz/ P60 [1]	Frame size	n_{rated}, 50 Hz	T_{rated}, 50 Hz	IE class 50 Hz	IE class 60 Hz	η_{rated}, 50 Hz, 4/4	η_{rated}, 50 Hz, 3/4	η_{rated}, 50 Hz, 2/4	cos φ_{rated}, 50 Hz, 4/4	I_{rated}, 50 Hz, 400 V	T_{LR}/T_{rated}, 50 Hz	I_{LR}/I_{rated}, 50 Hz	T_B/T_{rated}, 50 Hz	L_{pfA}, 50 Hz	L_{WA}, 50 Hz		$m_{IM\ B3}$	J	Torque class
kW	kW	FS	rpm	Nm			%	%	%		A				dB(A)	dB(A)		kg	kgm^2	CL
• Cooling: Self-ventilated (IC 411) or with order code F90 forced-air cooled without external fan and fan cover (IC 418)																				
• Efficiency: IE3 Premium Efficiency, service factor (SF) 1.15																				
• Insulation: Thermal class 155 (temperature class F), IP55 degree of protection, utilization in accordance with thermal class 130 (temperature class B)																				
2-pole: 3000 rpm at 50 Hz, 3600 rpm at 60 Hz [1]																				
0.75	**0.86**	**80 M**	2850	2.5	IE3	IE3	80.7	82.2	81.9	0.86	1.56	2.6	6.2	3	60	71	**1LE1003-0DA2■-■■■■**	11	0.0011	16
1.1	**1.27**	**80 M**	2885	3.6	IE3	IE3	82.7	83.9	83.1	0.85	2.25	3	7.1	3.3	60	71	**1LE1003-0DA3■-■■■■**	12	0.0013	16
1.5	**1.75**	**90 S**	2910	4.9	IE3	IE3	84.2	84.6	83.2	0.86	3	2.7	8.1	4.2	65	77	**1LE1003-0EA0■-■■■■**	15	0.0021	16
2.2	**2.55**	**90 L**	2910	7.2	IE3	IE3	85.9	86.8	86.1	0.88	4.2	2.6	8.3	4	65	77	**1LE1003-0EA4■-■■■■**	19	0.0031	16
3	**3.45**	**100 L**	2920	9.8	IE3	IE2	87.1	88	87.5	0.88	5.6	2.8	8	4.3	67	79	**1LE1003-1AA4■-■■■■**	26	0.0054	16
4	**4.55**	**112 M**	2945	13	IE3	IE2	88.1	89.1	88.7	0.9	7.3	1.8	8.2	3.5	69	81	**1LE1003-1BA2■-■■■■**	34	0.012	16
5.5	**6.3**	**132 S**	2950	17.8	IE3	IE3	89.2	90	89.7	0.9	9.9	1.8	7.4	3.6	68	80	**1LE1003-1CA0■-■■■■**	43	0.024	16
7.5	**8.6**	**132 S**	2950	24.5	IE3	IE3	90.1	91	91	0.92	13.1	1.9	8.3	3.9	68	80	**1LE1003-1CA1■-■■■■**	57	0.031	16
11	**12.6**	**160 M**	2955	35.5	IE3	IE3	91.2	91	89.5	0.89	19.6	2.4	7.9	3.8	70	82	**1LE1003-1DA2■-■■■■**	75	0.053	16
15	**17.3**	**160 M**	2960	48.5	IE3	IE3	91.9	92.1	91.2	0.87	27	2.7	8.7	4.3	70	82	**1LE1003-1DA3■-■■■■**	84	0.061	16
18.5	**21.3**	**160 L**	2955	60	IE3	IE3	92.4	92.8	92.4	0.9	32	2.8	9	4.2	70	82	**1LE1003-1DA4■-■■■■**	94	0.068	16
22	**24.5**	**180 M**	2950	71	IE3	IE3	92.7	93.2	92.9	0.89	38.5	2.3	7.5	3.5	67	80	**1LE1003-1EA2■-■■■■**	122	0.08	16
30	**33.5**	**200 L**	2955	97	IE3	IE3	93.3	93.5	92.9	0.87	53	2.5	7	3.3	67	80	**1LE1003-2AA4■-■■■■**	173	0.134	16
37	**41.5**	**200 L**	2955	120	IE3	IE3	93.7	94.2	94	0.88	65	2.5	7.1	3.2	67	80	**1LE1003-2AA5■-■■■■**	194	0.158	16

Voltages				**Motor protection**	No. of poles	Frame size	Motor type	Version				Order code(s)
Frame sizes 80 M to 90 L: Use of the 360° freely rotatable terminal box for 2 and 4-pole motors [2]												
50 Hz	230 VΔ/400 VY	60 Hz [1]	460 VY	PTC thermistor with 1 temperature sensor	2	80 M ... 90 L	1LE1003-0D ... -0E	**Standard**	**2**	**2**		–
50 Hz	400 VΔ/690 VY	60 Hz [1]	460 VΔ		2	80 M ... 90 L	1LE1003-0D ... -0E	**Standard**	**3**	**4**		–
50 Hz	400 VY	60 Hz [1]	460 VY	Without	2	80 M ... 90 L	1LE1003-0D ... -0E	**Standard**	**0**	**2**		–
Frame sizes 100 L to 200 L: Use of the 4 x 90° rotatable terminal box												
50 Hz	230 VΔ/400 VY	60 Hz [1]	460 VY	Any	2	100 L ... 200 L	1LE1003-1A ... -2A	**Standard**	**2**	**2**		–
50 Hz	400 VΔ/690 VY	60 Hz [1]	460 VΔ	Any	2	100 L ... 200 L	1LE1003-1A ... -2A	**Standard**	**3**	**4**		–
50 Hz	500 VY			Any	2	100 L ... 200 L	1LE1003-1A ... -2A	Without add. charge	**2**	**7**		–
50 Hz	500 VΔ			Any	2	100 L ... 200 L	1LE1003-1A ... -2A	Without add. charge	**4**	**0**		–
Further voltages [1]				For price information, code numbers, order codes, and descriptions, see from page 2/63					**9**	**0**		. . .
Types of construction					No. of poles	Frame size	Motor type	Version				Order code(s)
Without flange		IM B3 [3]			2	80 M ... 200 L	1LE1003-0D ... -2A	**Standard**			**A**	–
With flange		IM B5 [3]			2	80 M ... 200 L	1LE1003-0D ... -2A	With add. charge			**F**	–
With standard flange		IM B14 [3]			2	80 M ... 160 L	1LE1003-0D ... -2A	With add. charge			**K**	–
Further types of construction				For price information, code letters, and descriptions, see from page 2/68							■	. . .
Motor protection					No. of poles	Frame size	Motor type	Version				Order code(s)
Frame sizes 100 L to 200 L: Use of the 4 x 90° rotatable terminal box												
Without					2	100 L ... 200 L	1LE1003-0D ... -2A	**Standard**			**A**	–
PTC thermistor with 3 temperature sensors					2	100 L ... 200 L	1LE1003-0D ... -2A	With add. charge			**B**	–
Further motor protection				For price information, code letters, and descriptions, see from page 2/76							■	. . .
Terminal box position					No. of poles	Frame size	Motor type	Version				Order code(s)
Terminal box at top					2	80 M ... 200 L	1LE1003-0D ... -2A	**Standard**				**4** –
Further terminal box positions				For price information, code numbers, and descriptions, see from page 2/78								
Special versions												Order code(s)
Options				For price information, order codes, and descriptions, see from page 2/80				**1LE1003- . . . . ■-■■■■**				**-Z** . . .+. . .+. . .+. . .

[1] Operating values at rated power for 60 Hz are stored in the Drive Technology Configurator (DT Configurator; see Appendix, "Tools and Configuring").

[2] For converter operation of shaft heights 80 and 90, ordering with PTC thermistors and their connection to the converter is recommended.

[3] Types derived from IM B3 (IM B6/7/8, IM V6, and IM V5), from IM B5 (IM V3 and IM V1) and from IM B14 (IM V19 and IM V18) are possible, provided that no requirements exist for condensation drainage holes (**H03**) or stamping of the type on the rating plate. The basic type IM B3, IM B5 or IM B14 is stamped as standard on the rating plate. When ordering with condensation drainage holes (**H03**), the type must be specified.

© Siemens AG 2017

Selection and ordering data (continued)

P_{rated}, 50 Hz/ P50	P_{rated}, 60 Hz/ P60 [1]	Frame size	n_{rated}, 50 Hz	T_{rated}, 50 Hz	IE class 50 Hz	IE class 60 Hz	η_{rated}, 50 Hz, 4/4	η_{rated}, 50 Hz, 3/4	η_{rated}, 50 Hz, 2/4	cos φ_{rated}, 50 Hz, 4/4	I_{rated}, 50 Hz, 400 V	T_{LR}/T_{rated}, 50 Hz	I_{LR}/I_{rated}, 50 Hz	T_B/T_{rated}, 50 Hz	L_{pfA}, 50 Hz	L_{WA}, 50 Hz	Aluminum series 1LE1003 – IE3 version in accordance with IEC 60034-30 Article No.	$m_{IM\ B3}$	J	Torque class
kW	kW	FS	rpm	Nm			%	%	%		A				dB(A)	dB(A)		kg	kgm^2	CL
• Cooling: Self-ventilated (IC 411) or with order code F90 forced-air cooled without external fan and fan cover (IC 418) • Efficiency: IE3 Premium Efficiency, service factor (SF) 1.15 • Insulation: Thermal class 155 (temperature class F), IP55 degree of protection, utilization in accordance with thermal class 130 (temperature class B)																				
4-pole: 1500 rpm at 50 Hz, 1800 rpm at 60 Hz [1]																				
0.55	0.63	80 M	1440	3.6	IE3	IE3	80.8	81.1	79.3	0.78	1.26	2.1	5.9	3.1	53	64	1LE1003-0DB2■-■■■■	11	0.0021	16
0.75	0.86	80 M	1450	4.9	IE3	IE3	82.5	82.3	79.9	0.75	1.75	2.7	7.1	3.9	53	64	1LE1003-0DB3■-■■■■	14	0.0029	16
1.1	1.27	90 S	1440	7.3	IE3	IE3	84.1	84.7	83.4	0.78	2.4	2.9	6.9	3.6	56	68	1LE1003-0EB0■-■■■■	16	0.0036	16
1.5	1.75	90 L	1445	10	IE3	IE3	85.3	85.9	84.9	0.8	3.15	2.7	7.2	3.6	56	68	1LE1003-0EB4■-■■■■	19	0.0049	16
2.2	2.55	100 L	1465	14.3	IE3	IE2	86.7	87.3	86.4	0.83	4.4	2.1	7.6	3.6	60	72	1LE1003-1AB4■-■■■■	30	0.014	16
3	3.45	100 L	1460	20	IE3	IE3	87.7	88.4	88.2	0.83	5.9	2.3	7.3	3.7	60	72	1LE1003-1AB5■-■■■■	30	0.014	16
4	4.55	112 M	1460	26	IE3	IE3	88.6	89.2	88.6	0.82	7.9	2.4	7.1	3.7	58	70	1LE1003-1BB2■-■■■■	34	0.017	16
5.5	6.3	132 S	1470	36	IE3	IE2	89.6	90.1	89.5	0.84	10.5	2.1	7.2	3.4	64	76	1LE1003-1CB0■-■■■■	64	0.046	16
7.5	8.6	132 M	1470	49	IE3	IE2	90.4	91.1	90.8	0.84	14.3	2.4	7.4	3.5	64	76	1LE1003-1CB2■-■■■■	64	0.046	16
11	12.6	160 M	1475	71	IE3	IE3	91.4	91.9	91.4	0.84	20.5	2.2	6.8	3.2	65	77	1LE1003-1DB2■-■■■■	83	0.083	16
15	17.3	160 L	1475	97	IE3	IE3	92.1	92.3	91.5	0.82	28.5	2.5	8.5	3.8	65	77	1LE1003-1DB4■-■■■■	100	0.099	16
18.5	21.3	180 M	1470	120	IE3	IE3	92.6	93.1	92.9	0.82	35	2.5	7.2	3.3	66	73	1LE1003-1EB2■-■■■■	134	0.13	16
22	25.3	180 L	1470	143	IE3	IE3	93	93.7	93.6	0.83	41	2.3	6.8	3.3	68	75	1LE1003-1EB4■-■■■■	142	0.14	16
30	34.5	200 L	1470	195	IE3	IE2	93.6	94	93.7	0.84	55	2.6	7.3	3.1	65	72	1LE1003-2AB5■-■■■■	189	0.22	16

Voltages				Motor protection	No. of poles	Frame size	Motor type	Version				Order code(s)
Frame sizes 80 M to 90 L: Use of the 360° freely rotatable terminal box for 2 and 4-pole motors [2]												
50 Hz	230 VΔ/400 VY	60 Hz [1]	460 VY	PTC thermistor with 1 temperature sensor	4	80 M ... 90 L	1LE1003-0D ... -0E	**Standard**	2	2		–
50 Hz	400 VΔ/690 VY	60 Hz [1]	460 VΔ		4	80 M ... 90 L	1LE1003-0D ... -0E	**Standard**	3	4		–
50 Hz	400 VY	60 Hz [1]	460 VY	Without	4	80 M ... 90 L	1LE1003-0D ... -0E	**Standard**	0	2		–
Frame sizes 100 L to 200 L: Use of the 4 x 90° rotatable terminal box												
50 Hz	230 VΔ/400 VY	60 Hz [1]	460 VY	Any	4	100 L ... 200 L	1LE1003-1A ... -2A	**Standard**	2	2		–
50 Hz	400 VΔ/690 VY	60 Hz [1]	460 VΔ	Any	4	100 L ... 200 L	1LE1003-1A ... -2A	**Standard**	3	4		–
50 Hz	500 VY			Any	4	100 L ... 200 L	1LE1003-1A ... -2A	Without add. charge	2	7		–
50 Hz	500 VΔ			Any	4	100 L ... 200 L	1LE1003-1A ... -2A	Without add. charge	4	0		–
Further voltages [1]				For price information, code numbers, and descriptions, see from page 2/63					9	0		. . .

Types of construction			No. of poles	Frame size	Motor type	Version				Order code(s)
Without flange		IM B3 [3]	4	80 M ... 200 L	1LE1003-0D ... -2A	**Standard**		A		–
With flange		IM B5 [3]	4	80 M ... 200 L	1LE1003-0D ... -2A	With add. charge		F		–
With standard flange		IM B14 [3]	4	80 M ... 160 L	1LE1003-0D ... -2A	With add. charge		K		–
Further types of construction			For price information, code letters, and descriptions, see from page 2/68					■		. . .

Motor protection	No. of poles	Frame size	Motor type	Version				Order code(s)
Frame sizes 100 L to 200 L: Use of the 4 x 90° rotatable terminal box								
Without	4	100 L ... 200 L	1LE1003-0D ... -2A	**Standard**		A		–
PTC thermistor with 3 temperature sensors	4	100 L ... 200 L	1LE1003-0D ... -2A	With add. charge		B		–
Further motor protection	For price information, code letters, and descriptions, see from page 2/76					■		. . .

Terminal box position	No. of poles	Frame size	Motor type	Version				Order code(s)
Terminal box at top	4	80 M ... 200 L	1LE1003-0D ... -2A	**Standard**			4	–
Further terminal box positions	For price information, code numbers, and descriptions, see from page 2/78							

Special versions								Order code(s)
Options	For price information, order codes, and descriptions, see from page 2/80			**1LE1003- . . . .**	■	■	■	-Z . . .+. . .+. . .+. . .

[1] Operating values at rated power for 60 Hz are stored in the Drive Technology Configurator (DT Configurator; see Appendix, "Tools and Configuring").

[2] For converter operation of shaft heights 80 and 90, ordering with PTC thermistors and their connection to the converter is recommended.

[3] Types derived from IM B3 (IM B6/7/8, IM V6, and IM V5), from IM B5 (IM V3 and IM V1) and from IM B14 (IM V19 and IM V18) are possible, provided that no requirements exist for condensation drainage holes (**H03**) or stamping of the type on the rating plate. The basic type IM B3, IM B5 or IM B14 is stamped as standard on the rating plate. When ordering with condensation drainage holes (**H03**), the type must be specified.

© Siemens AG 2017

Selection and ordering data (continued)

P_{rated}, 50 Hz/ P50	P_{rated}, 60 Hz/ P60 [1]	Frame size	Operating values at rated power: n_{rated}, 50 Hz	T_{rated}, 50 Hz	IE class 50 Hz	IE class 60 Hz	η_{rated}, 50 Hz, 4/4	η_{rated}, 50 Hz, 3/4	η_{rated}, 50 Hz, 2/4	cos φ_{rated}, 50 Hz, 4/4	I_{rated}, 50 Hz, 400 V	T_{LR}/T_{rated}, 50 Hz	I_{LR}/I_{rated}, 50 Hz	T_B/T_{rated}, 50 Hz	L_{pfA}, 50 Hz	L_{WA}, 50 Hz	Aluminum series 1LE1003 – IE3 version in accordance with IEC 60034-30 Article No.	$m_{IM\ B3}$	J	Torque class
kW	kW	FS	rpm	Nm			%	%	%		A				dB(A)	dB(A)	▲ New	kg	kgm^2	CL
• Cooling: Self-ventilated (IC 411) or with order code F90 forced-air cooled without external fan and fan cover (IC 418) • Efficiency: IE3 Premium Efficiency, service factor (SF) 1.15 • Insulation: Thermal class 155 (temperature class F), IP55 degree of protection, utilization in accordance with thermal class 130 (temperature class B)																				
6-pole: 1000 rpm at 50 Hz, 1200 rpm at 60 Hz [1]																				
0.37	**0.43**	**80 M**	940	3.8	IE3	IE3	73.5	73.1	69.4	0.66	1.1	2.3	4.2	2.7	42	53	**1LE1003-0DC2■-■■■■**	12	0.0025	16
0.55	**0.63**	**80 M**	935	5.6	IE3	IE3	77.2	77	73.9	0.67	1.53	2.5	4.5	2.8	42	53	**1LE1003-0DC3■-■■■■**	14	0.0031	16
0.75	**0.86**	**90 S**	945	7.6	IE3	IE3	78.9	80	78.8	0.7	1.96	2.2	4.6	2.6	43	55	**1LE1003-0EC0■-■■■■**	16	0.004	16
1.1	**1.27**	**90 L**	940	11	IE3	IE1	81	82	80.5	0.69	2.85	2.3	4.6	2.7	43	55	**1LE1003-0EC4■-■■■■**	19	0.0048	16
1.5	**1.75**	**100 M**	970	14.8	IE3	IE2	82.5	83.1	81.5	0.73	3.6	1.9	5.2	2.8	59	71	**1LE1003-1AC4■-■■■■**	25	0.011	13
2.2	**2.55**	**112 M**	970	22	IE3	IE2	84.3	85	83.9	0.75	5	2.2	5.6	2.8	65	74	**1LE1003-1BC2■-■■■■**	34	0.017	13
3	**3.45**	**132 S**	975	30	IE3	IE2	85.6	86.9	86.6	0.77	6.6	1.6	5.3	2.4	63	75	**1LE1003-1CC0■-■■■■**	43	0.029	13
4	**4.55**	**132 M**	975	39	IE3	IE2	86.8	88	87.8	0.77	8.6	1.7	5.6	2.5	63	75	**1LE1003-1CC2■-■■■■**	52	0.037	13
5.5	**6.3**	**132 M**	975	54	IE3	IE2	88	89.1	88.8	0.77	11.7	1.8	5.7	2.6	63	75	**1LE1003-1CC3■-■■■■**	64	0.046	13
7.5	**8.6**	**160 M**	980	73	IE3	IE2	89.1	90.1	89.7	0.76	16	1.9	4.9	2.3	67	79	**1LE1003-1DC2■-■■■■**	93	0.098	16
11	**12.6**	**160 L**	975	108	IE3	IE2	90.3	91.2	90.8	0.77	23	1.9	5	2.3	67	79	**1LE1003-1DC4■-■■■■**	115	0.12	16
15	**18**	**180 L**	975	147	IE3	IE2	91.2	92	91.9	0.8	29.5	2.3	5.9	2.8	61	68	**1LE1003-1EC4■-■■■■**	130	0.19	16
18.5	**22**	**200 L**	978	181	IE3	IE2	91.7	92.5	92.4	0.79	37	2.5	5.6	2.6	64	71	**1LE1003-2AC4■-■■■■**	166	0.28	16
22	**26.5**	**200 L**	978	215	IE3	IE2	92.2	93.1	93.2	0.79	43.5	2.5	5.6	2.6	61	68	**1LE1003-2AC5■-■■■■**	179	0.32	16
8-pole: 750 rpm at 50 Hz, 900 rpm at 60 Hz [1]																				
2.2	**2.55**	**132 S**	725	29	IE3	IE3	81.9	82.9	81.8	0.63	6.2	1.4	3.6	1.8	64	77	▲ **1LE1003-1CD0■-■■■■**	56	0.038	10
3	**3.45**	**132 M**	725	40	IE3	IE3	83.5	84.2	82.7	0.61	8.5	1.5	3.8	2	64	77	▲ **1LE1003-1CD2■-■■■■**	65	0.048	13
4	**4.55**	**160 M**	730	52	IE3	IE3	84.8	85.6	84.5	0.66	10.3	1.6	3.6	1.8	65	78	▲ **1LE1003-1DD2■-■■■■**	72	0.065	13
5.5	**6.3**	**160 M**	730	72	IE3	IE3	86.2	86.9	85.7	0.66	14	1.6	3.8	1.9	65	78	▲ **1LE1003-1DD3■-■■■■**	86	0.083	13
7.5	**8.6**	**160 L**	728	98	IE3	IE3	87.3	88.2	87.7	0.65	19.1	1.6	3.8	1.9	65	78	▲ **1LE1003-1DD4■-■■■■**	110	0.116	13
11	**13.2**	**180 L**	725	145	IE3	IE3	88.6	89.7	89.6	0.74	24	2.1	5.1	2.4	61	74	▲ **1LE1003-1ED4■-■■■■**	161	0.267	16
15	**18**	**200 L**	730	196	IE3	IE3	89.6	90.1	89.4	0.73	33.5	3	6.8	3.7	57	70	▲ **1LE1003-2AD5■-■■■■**	212	0.420	16

Voltages				**Motor protection**	No. of poles	Frame size	Motor type	Version				Order code(s)
Frame sizes 80 M to 90 L: Use of the 360° freely rotatable terminal box for 2 and 4-pole motors [2]												
50 Hz	230 VΔ/400 VY	60 Hz [1]	460 VY	PTC thermistor	6, 8	80 M ... 90 L	1LE1003-0D ... -0E	**Standard**	**2**	**2**		–
50 Hz	400 VΔ/690 VY	60 Hz [1]	460 VΔ	with 1 temperature sensor	6, 8	80 M ... 90 L	1LE1003-0D ... -0E	**Standard**	**3**	**4**		–
50 Hz	400 VY	60 Hz [1]	460 VY	Without	6, 8	80 M ... 90 L	1LE1003-0D ... -0E	**Standard**	**0**	**2**		–
Frame sizes 100 L to 200 L: Use of the 4 x 90° rotatable terminal box												
50 Hz	230 VΔ/400 VY	60 Hz [1]	460 VY	Any	6, 8	100 L ... 200 L	1LE1003-1A ... -2A	**Standard**	**2**	**2**		–
50 Hz	400 VΔ/690 VY	60 Hz [1]	460 VΔ	Any	6, 8	100 L ... 200 L	1LE1003-1A ... -2A	**Standard**	**3**	**4**		–
50 Hz	500 VY			Any	6, 8	100 L ... 200 L	1LE1003-1A ... -2A	Without add. charge	**2**	**7**		–
50 Hz	500 VΔ			Any	6, 8	100 L ... 200 L	1LE1003-1A ... -2A	Without add. charge	**4**	**0**		–
Further voltages [1]				For price information, code numbers, order codes, and descriptions, see from page 2/63					**9**	**0**		. . .

Types of construction			No. of poles	Frame size	Motor type	Version				Order code(s)
Without flange		IM B3 [3]	6, 8	80 M ... 200 L	1LE1003-0D ... -2A	**Standard**			**A**	–
With flange		IM B5 [3]	6, 8	80 M ... 200 L	1LE1003-0D ... -2A	With add. charge			**F**	–
With standard flange		IM B14 [3]	6, 8	80 M ... 160 L	1LE1003-0D ... -2A	With add. charge			**K**	–
Further types of construction		For price information, code letters, and descriptions, see from page 2/68							■	. . .

Motor protection	No. of poles	Frame size	Motor type	Version				Order code(s)
Frame sizes 100 L to 200 L: Use of the 4 x 90° rotatable terminal box								
Without	6, 8	100 L ... 200 L	1LE1003-0D ... -2A	**Standard**			**A**	–
PTC thermistor with 3 temperature sensors	6, 8	100 L ... 200 L	1LE1003-0D ... -2A	With add. charge			**B**	–
Further motor protection	For price information, code letters, and descriptions, see from page 2/76						■	. . .

Terminal box position	No. of poles	Frame size	Motor type	Version				Order code(s)
Terminal box at top	6, 8	80 M ... 200 L	1LE1003-0D ... -2A	**Standard**			**4**	–
Further terminal box positions	For price information, code numbers, and descriptions, see from page 2/78							

Special versions												Order code(s)
Options	For price information, order codes, and descriptions, see from page 2/80	**1LE1003- . . . . ■-■■■■**									**-Z**	. . .+. . .+. . .+. . .

[1] Operating values at rated power for 60 Hz are stored in the Drive Technology Configurator (DT Configurator; see Appendix, "Tools and Configuring").

[2] For converter operation of shaft heights 80 and 90, ordering with PTC thermistors and their connection to the converter is recommended.

[3] Types derived from IM B3 (IM B6/7/8, IM V6, and IM V5), from IM B5 (IM V3 and IM V1) and from IM B14 (IM V19 and IM V18) are possible, provided that no requirements exist for condensation drainage holes (**H03**) or stamping of the type on the rating plate. The basic type IM B3, IM B5 or IM B14 is stamped as standard on the rating plate. When ordering with condensation drainage holes (**H03**), the type must be specified.

© Siemens AG 2017

Selection and ordering data

Voltages	Voltage code 12th and 13th position of the Article No.		Additional identification code with order code and plain text if required	Motor category								
				Motor version	**Motor type (aluminum)**	**Motor type – frame size**						
						80	**90**	**100**	**112**	**132**	**160**	**180**	**200**
				IE2 High Efficiency	1LE1001	**1LE1001** ①							
					1PC1001			**1PC1001** ②					
					1LE1041	**1LE1041 APAC Line** ③							
				IE3 Premium Efficiency	1LE1003	**1LE1003** ④							
					1LE1043	**1LE1043 APAC Line** ⑤							
				IE4 Super Premium Efficiency	1LE1004			**1LE1004** ⑥					
				IE1 Standard Efficiency	1LE1002	**1LE1002** ⑦							
					1PC1002			**1PC1002** ⑧					
				NEMA Energy Efficient	1LE1021		**1LE1021 Eagle Line** ⑨						
				NEMA Premium Efficient	1LE1023	**1LE1023 Eagle Line** ⑩							
1LE10 . . - . . . . ■ - ■ . . .				Motor version	Motor type	Frame size							
1PC10 . . - . . . . ■ - ■ . . .			Order code			80	90	100	112	132	160	180	200
Voltage at 50 Hz or 60 Hz – Operating values at rated power for 60 Hz are stored in the Drive Technology Configurator (DTC)													
50 Hz 230 VΔ/400 VY, 60 Hz 460 VY	**2**	**2**	–	All	All	◘	◘	◘	◘	◘	◘	◘	◘
50 Hz 400 VΔ/690 VY, 60 Hz 460 VΔ [1]	**3**	**4**	–	All except ③, ⑤, ⑨ and ⑩		◘	◘	◘	◘	◘	◘	◘	◘
50 Hz 400 VΔ, 60 Hz 460 VΔ [1]			–	Only applicable for ③, ⑤, ⑨, and ⑩		◘	◘	◘	◘	◘	◘	◘	◘
50 Hz 400 VY, 60 Hz 460 VY [2] [3]	**0**	**2**	–	All	All	◘	◘	◘	◘	◘	◘	◘	◘
50 Hz 400 VY, 60 Hz 460 VY [4]	**0**	**4**	–	All	All	◘	◘	◘	◘	◘	◘	◘	◘
50 Hz 500 VY 60 Hz 575 VY [7]	**2**	**7**	–	All except ⑥		○	○	○	○	○	○	○	○
50 Hz 500 VΔ 60 Hz 575 VΔ	**4**	**0**	–	All except ⑥		–	–	○	○	○	○	○	○
50 Hz 220 VΔ/380 VY 60 Hz 440 VY	**2**	**1**	–	All	All	✓	✓	✓	✓	✓	✓	✓	✓
50 Hz 380 VΔ/660 VY [1], 60 Hz 440 VΔ	**3**	**3**	–	All except ③, ⑤, ⑨ and ⑩		✓	✓	✓	✓	✓	✓	✓	✓
50 Hz 380 VΔ [1]			–	Only applicable for ③, ⑤, ⑨, and ⑩		–	–	✓	✓	✓	✓	✓	✓
50 Hz 240 VΔ/415 VY, 60 Hz 480 VY	**2**	**3**	–	All	All	✓	✓	✓	✓	✓	✓	✓	✓
50 Hz 415 VΔ, 60 Hz 480 VΔ	**3**	**5**	–	All	All	✓	✓	✓	✓	✓	✓	✓	✓
60 Hz 220 VΔ/380 VY	**1**	**7**	–	All except ⑦ and ⑧		✓	✓	✓	✓	✓	✓	✓	✓
60 Hz 230 VΔ/400 VY	**1**	**8**	–	All except ⑦ and ⑧		✓	✓	✓	✓	✓	✓	✓	✓
60 Hz 380 VΔ/660 VY [1]	**3**	**0**	–	All except ⑦, ⑧, ⑨ and ⑩		✓	✓	✓	✓	✓	✓	✓	✓
60 Hz 380 VΔ [1]			–	Only applicable for ⑨ and ⑩		✓	✓	✓	✓	✓	✓	✓	✓
60 Hz 400 VΔ/690 VY [1]	**3**	**1**	–	All except ⑦, ⑧, ⑨ and ⑩		✓	✓	✓	✓	✓	✓	✓	✓
60 Hz 400 VΔ [1]			–	Only applicable for ⑨ and ⑩		✓	✓	✓	✓	✓	✓	✓	✓
Multi-voltage at 60 Hz and required power at 60 Hz													
60 Hz 230 VYY/460 VY; 50 Hz power, 9 main terminals, and electrical version according to NEMA	**6**	**0**	–	All except ②, ③, ⑦ and ⑧		–	–	–	–	–	–	✓	✓
60 Hz 230 VYY/460 VY; 60 Hz power, 9 main terminals, and electrical version according to NEMA	**6**	**1**	–	All except ②, ③, ⑦ and ⑧		–	–	–	–	–	–	✓	✓
60 Hz 230 VΔΔ/460 VΔ; 50 Hz power, 12 main terminals, and electrical version according to NEMA	**6**	**2**	–	All except ②, ③, ⑦ and ⑧		–	–	–	–	–	–	✓	✓
60 Hz 230 VΔΔ/460 VΔ; 60 Hz power, 12 main terminals, and electrical version according to NEMA	**6**	**3**	–	All except ②, ③, ⑦ and ⑧		–	–	–	–	–	–	✓	✓

For legends and footnotes, see page 2/64.

© Siemens AG 2017

Article No. supplements and special versions
SIMOTICS GP 1LE1/1PC1 standard motors

Voltages · Aluminum series 1LE10, 1PC10

Voltages	Voltage code 12th and 13th position of the Article No.		Additional identification code with order code and plain text if required	Motor category: Motor version	Motor type (aluminum)	Motor type – frame size 80	90	100	112	132	160	180	200
				IE2 High Efficiency	1LE1001	1LE1001 ①							
					1PC1001			1PC1001 ②					
					1LE1041	1LE1041 APAC Line ③							
				IE3 Premium Efficiency	1LE1003	1LE1003 ④							
					1LE1043	1LE1043 APAC Line ⑤							
				IE4 Super Premium Efficiency	1LE1004			1LE1004 ⑥					
				IE1 Standard Efficiency	1LE1002	1LE1002 ⑦							
					1PC1002			1PC1002 ⑧					
				NEMA Energy Efficient	1LE1021		1LE1021 Eagle Line ⑨						
				NEMA Premium Efficient	1LE1023	1LE1023 Eagle Line ⑩							
1LE10 . . - . . . . ■ - ■ . . .				Motor version	Motor type	Frame size 80	90	100	112	132	160	180	200
1PC10 . . - . . . . ■ - ■ . . .			Order code										
Voltage at 60 Hz and required power at 60 Hz													
220 VΔ/380 VY; 50 Hz power	**9**	**0**	**M2A**	All	All	✓	✓	✓	✓	✓	✓	✓	✓
220 VΔ/380 VY; 60 Hz power	**9**	**0**	**M1A**	All except ③, ⑤, ⑨ and ⑩		✓	✓	✓	✓	✓	✓	✓	✓
380 VΔ/660 VY; 50 Hz power [1]	**9**	**0**	**M2B**	All except ③, ⑤, ⑨ and ⑩		✓	✓	✓	✓	✓	✓	✓	✓
380 VΔ; 50 Hz power [1]				Only applicable for ③, ⑤, ⑨, and ⑩		–	–	✓	✓	✓	✓	✓	✓
380 VΔ/660 VY; 60 Hz power [1] [5]	**9**	**0**	**M1B**	All except ③, ⑤, ⑨ and ⑩		✓	✓	✓	✓	✓	✓	✓	✓
440 VY; 50 Hz power	**9**	**0**	**M2C**	All	All	✓	✓	✓	✓	✓	✓	✓	✓
440 VY; 60 Hz power	**9**	**0**	**M1C**	All except ③, ⑤, ⑨ and ⑩		✓	✓	✓	✓	✓	✓	✓	✓
440 VΔ; 50 Hz power	**9**	**0**	**M2D**	All	All	✓	✓	✓	✓	✓	✓	✓	✓
440 VΔ; 60 Hz power	**9**	**0**	**M1D**	All except ③, ⑤, ⑨ and ⑩		✓	✓	✓	✓	✓	✓	✓	✓
460 VY; 50 Hz power	**9**	**0**	**M2E**	All	All	✓	✓	✓	✓	✓	✓	✓	✓
460 VY; 60 Hz power	**9**	**0**	**M1E**	All except ③, ⑤, ⑨ and ⑩		○	○	○	○	○	○	○	○
460 VΔ; 50 Hz power	**9**	**0**	**M2F**	All	All	✓	✓	✓	✓	✓	✓	✓	✓
460 VΔ; 60 Hz power	**9**	**0**	**M1F**	All except ③, ⑤, ⑨ and ⑩		○	○	○	○	○	○	○	○
575 VY; 50 Hz power [7]	**9**	**0**	**M2G**	All except ⑥		✓	✓	✓	✓	✓	✓	✓	✓
575 VY; 60 Hz power [7]	**9**	**0**	**M1G**	All except ③, ⑤, ⑨ and ⑩		✓	✓	✓	✓	✓	✓	✓	✓
575 VΔ; 50 Hz power [7]	**9**	**0**	**M2H**	All except ⑥		✓	✓	✓	✓	✓	✓	✓	✓
575 VΔ; 60 Hz power [7]	**9**	**0**	**M1H**	All except ③, ⑤, ⑨ and ⑩		✓	✓	✓	✓	✓	✓	✓	✓
400 VΔ/690 VY; 50 Hz power [1]	**9**	**0**	**M2J**	All except ⑨ and ⑩		✓	✓	✓	✓	✓	✓	✓	✓
400 VΔ; 50 Hz power				Only applicable for ⑨ and ⑩		✓	✓	✓	✓	✓	✓	✓	✓
400 VΔ/690 VY; 60 Hz power	**9**	**0**	**M1J**	All except ⑨ and ⑩		✓	✓	✓	✓	✓	✓	✓	✓
480 VY; 50 Hz power	**9**	**0**	**M2K**	All	All	✓	✓	✓	✓	✓	✓	✓	✓
480 VY; 60 Hz power	**9**	**0**	**M1K**	All except ⑨ and ⑩		✓	✓	✓	✓	✓	✓	✓	✓
480 VΔ; 50 Hz power	**9**	**0**	**M2L**	All	All	✓	✓	✓	✓	✓	✓	✓	✓
480 VΔ; 60 Hz power	**9**	**0**	**M1L**	All except ⑨ and ⑩		✓	✓	✓	✓	✓	✓	✓	✓
230 VΔ/400 VY; 50 Hz power	**9**	**0**	**M2M**	All	All	✓	✓	✓	✓	✓	✓	✓	✓
230 VΔ/400 VY; 60 Hz power	**9**	**0**	**M1M**	All except ⑨ and ⑩		✓	✓	✓	✓	✓	✓	✓	✓
Voltage at 87 Hz and 87 Hz power													
400 VΔ [5]	**9**	**0**	**M3A**	All	All	✓	✓	✓	✓	✓	✓	✓	✓
Non-standard voltage and/or frequencies													
Non-standard winding [6]	**9**	**0**	**M1Y** • and customer specifications	All	All	✓	✓	✓	✓	✓	✓	✓	✓

□ Standard version
○ Without additional charge
• This order code only determines the price of the version – Additional plain text is required.
✓ With additional charge
– Not possible

1) For North America export versions Eagle Line 1LE1021 NEMA Energy Efficient and 1LE1023 NEMA Premium Efficient, voltages above 600 V will not be stamped.

2) Frame sizes 80 and 90 with voltage code 02 can only be supplied without motor protection (motor protection code A).

3) Delta connection is not possible.

4) Star connection is not possible.

5) Only possible for 4-pole, 6-pole and 8-pole motors. The operating data for converter operation is also provided in a table on the rating plate.

6) Plain text must be specified in the order: Voltage between 200 and 690 V (voltages outside this range are available on request), frequency, circuit, for 60 Hz additionally required rated power in kW.

7) Not possible for 2-pole and 4-pole motors with increased power (11th position of the Article No.: 6) in frame sizes 80 and 90.

© Siemens AG 2017

Selection and ordering data

Types of construction		Type of construction letter 14th position of the Article No.	For types of construction with order code(s) Article No. with additional identification code **-Z**	Motor category	Motor version	Motor type (aluminum)	Motor type – frame size 80	90	100	112	132	160	180	200
					IE2 High Efficiency	1LE1001	**1LE1001** ①							
						1PC1001			**1PC1001** ②					
						1LE1041	**1LE1041 APAC Line** ③							
					IE3 Premium Efficiency	1LE1003	**1LE1003** ④							
						1LE1043	**1LE1043 APAC Line** ⑤							
					IE4 Super Premium Efficiency	1LE1004			**1LE1004** ⑥					
					IE1 Standard Efficiency	1LE1002	**1LE1002** ⑦							
						1PC1002			**1PC1002** ⑧					
					NEMA Energy Efficient	1LE1021		**1LE1021 Eagle Line** ⑨						
					NEMA Premium Efficient	1LE1023	**1LE1023 Eagle Line** ⑩							
					Pole-changing	1LE1011			**1LE1011** ⑪					
						1LE1012			**1LE1012** ⑫					
1LE10 . . - . . . . . - . ■ . . (-Z)				Motor version		Motor type	Frame size 80	90	100	112	132	160	180	200
1PC10 . . - . . . . . - . ■ . . (-Z)			Order code											
Without flange														
IM B3 [1) 2) 3)]	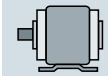	**A**	**–**	All except ③ and ⑨			□	□	□	□	□	□	□	□
IM B6 [2) 3)]	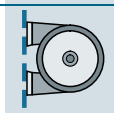	**T**	**–**	All except ③ and ⑨			□	□	□	□	□	□	□	□
IM B7 [2) 3) 9)]	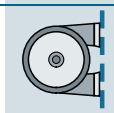	**U**	**–**	All except ③ and ⑨			□	□	□	□	□	□	□	□
IM B8 [2) 3)]	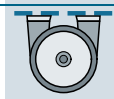	**V**	**–**	All except ③ and ⑨			□	□	□	□	□	□	□	□
IM V6 [2) 3)]	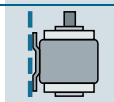	**D**	**–**	All except ③ and ⑨			□	□	□	□	□	□	□	□
IM V5 without protective cover [2) 3)]	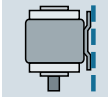	**C**	**–**	All except ③ and ⑨			□	□	□	□	□	□	□	□
IM V5 with protective cover [2) 3) 4) 5) 6)]	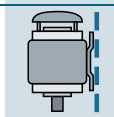	**C**	**H00**	All except ②, ③, ⑧, ⑨ and in combination with order code F90			✓	✓	✓	✓	✓	✓	✓	✓
With flange		**Acc. to EN 50347 Acc. to DIN 42948**					**FF165 A 200**	**FF165 A 200**	**FF215 A 250**	**FF215 A 250**	**FF265 A 300**	**FF300 A 350**	**FF300 A 350**	**FF350 A 400**
IM B5 [2) 7)]	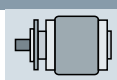	**F**	**–**	All	All		✓	✓	✓	✓	✓	✓	✓	✓
IM V1 without protective cover [2)]	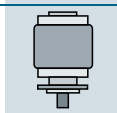	**G**	**–**	All	All		✓	✓	✓	✓	✓	✓	✓	✓
IM V1 with protective cover [2) 4) 5) 6)]	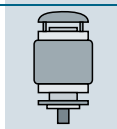	**G**	**H00**	All except ②, ⑧ and in combination with order code F90			✓	✓	✓	✓	✓	✓	✓	✓
IM V3 [4)]	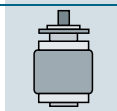	**H**	**–**	All	All		✓	✓	✓	✓	✓	✓	✓	✓
IM B35 [3)]	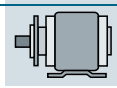	**J**	**–**	All except ③ and ⑨			✓	✓	✓	✓	✓	✓	✓	✓

For legends and footnotes, see page 2/71.

© Siemens AG 2017

Types of construction		Type of construction letter 14th position of the Article No.	For types of construction with order code(s) Article No. with additional identification code **-Z**	Motor category									
				Motor version	**Motor type (aluminum)**	**Motor type – frame size**							
						80	**90**	**100**	**112**	**132**	**160**	**180**	**200**
				IE2 High Efficiency	1LE1001	**1LE1001 ①**							
					1PC1001			**1PC1001 ②**					
					1LE1041	**1LE1041 APAC Line ③**							
				IE3 Premium Efficiency	1LE1003	**1LE1003 ④**							
					1LE1043	**1LE1043 APAC Line ⑤**							
				IE4 Super Premium Efficiency	1LE1004			**1LE1004 ⑥**					
				IE1 Standard Efficiency	1LE1002	**1LE1002 ⑦**							
					1PC1002			**1PC1002 ⑧**					
				NEMA Energy Efficient	1LE1021	**1LE1021 Eagle Line ⑨**							
				NEMA Premium Efficient	1LE1023	**1LE1023 Eagle Line ⑩**							
				Pole-changing	1LE1011			**1LE1011 ⑪**					
					1LE1012			**1LE1012 ⑫**					
1LE10 . . - . . . . . - . ■ . . (-Z)				Motor version	Motor type	Frame size							
1PC10 . . - . . . . . - . ■ . . (-Z)			Order code			80	90	100	112	132	160	180	200
With special flange next larger		**Acc. to EN 50347**				–	–	**FF265**	**FF265**	**FF300**	–	–	–
		Acc. to DIN 42948				–	–	**A 300**	**A 300**	**A 350**	–	–	–
IM B5 [2) 7)]	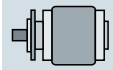	**F**	**P01**	All	All	–	–	✓	✓	✓	–	–	–
IM V1 without protective cover [2)]	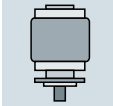	**G**	**P01**	All	All	–	–	✓	✓	✓	–	–	–
IM V1 with protective cover [2) 4) 5) 6)]	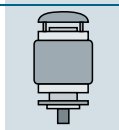	**G**	**P01+H00**	All except ②, ⑧ and in combination with order code F90		–	–	✓	✓	✓	–	–	–
IM V3 [4)]	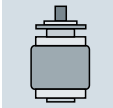	**H**	**P01**	All	All	–	–	✓	✓	✓	–	–	–
IM B35 [3)]	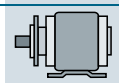	**J**	**P01**	All except ③ and ⑨		–	–	✓	✓	✓	–	–	–
With special flange next smaller		**Acc. to EN 50347**				**FF130**	**FF165**	**FF165**	**FF165**	**FF215**	**FF265**	**FF265**	**FF300**
		Acc. to DIN 42948				**A 160**	**A 200**	**A 200**	**A 200**	**A 250**	**A 300**	**A 300**	**A 350**
IM B5 [2) 7)]	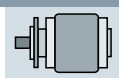	**F**	**P02**	All	All	✓	✓	✓	✓	✓	✓	✓	✓
IM V1 without protective cover [2)]	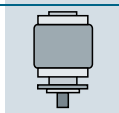	**G**	**P02**	All	All	–	–	O. R.	O. R.	O. R.	O. R.	O. R.	O. R.
IM V1 with protective cover [2) 4) 5) 6)]	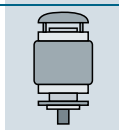	**G**	**P02+H00**	All except ②, ⑧ and in combination with order code F90		–	–	O. R.	O. R.	O. R.	O. R.	O. R.	O. R.
IM V3 [4)]		**H**	**P02**	All	All	–	–	O. R.	O. R.	O. R.	O. R.	O. R.	O. R.
IM B35 [3)]	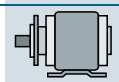	**J**	**P02**	All except ③ and ⑨		–	–	O. R.	O. R.	O. R.	O. R.	O. R.	O. R.

For legends and footnotes, see page 2/71.

© Siemens AG 2017

Types of construction · Aluminum series 1LE10, 1PC10

2

Types of construction		Type of construction letter 14th position of the Article No.	For types of construction with order code(s) Article No. with additional identification code **-Z**	Motor category **Motor version**	**Motor type (aluminum)**	**Motor type – frame size** **80**	**90**	**100**	**112**	**132**	**160**	**180**	**200**
				IE2 High Efficiency	1LE1001	**1LE1001** ①							
					1PC1001			**1PC1001** ②					
					1LE1041	**1LE1041 APAC Line** ③							
				IE3 Premium Efficiency	1LE1003	**1LE1003** ④							
					1LE1043	**1LE1043 APAC Line** ⑤							
				IE4 Super Premium Efficiency	1LE1004			**1LE1004** ⑥					
				IE1 Standard Efficiency	1LE1002	**1LE1002** ⑦							
					1PC1002			**1PC1002** ⑧					
				NEMA Energy Efficient	1LE1021		**1LE1021 Eagle Line** ⑨						
				NEMA Premium Efficient	1LE1023	**1LE1023 Eagle Line** ⑩							
				Pole-changing	1LE1011			**1LE1011** ⑪					
					1LE1012			**1LE1012** ⑫					
1LE10 . . - . . . . . - . ■ . . (-Z) **1PC10 . . - . . . . . - . ■ . . (-Z)**			Order code	Motor version	Motor type	Frame size 80	90	100	112	132	160	180	200
With standard flange		**Acc. to EN 50347** **Acc. to DIN 42948**				**FT100** **C 120**	**FT115** **C 140**	**FT130** **C 160**	**FT130** **C 160**	**FT165** **C 200**	**FT215** **C 250**	**–** **–**	**–** **–**
IM B14 [2) 8)]		**K**	**–**	All	All	✓	✓	✓	✓	✓	✓	–	–
IM V19 [2)]		**L**	**–**	All	All	✓	✓	✓	✓	✓	✓	–	–
IM V18 without protective cover [2)]		**M**	**–**	All	All	✓	✓	✓	✓	✓	✓	–	–
IM V18 with protective cover [2) 4) 5) 6)]		**M**	**H00**	All except ②, ⑧ and in combination with order code F90		✓	✓	✓	✓	✓	✓	–	–
IM B34 [3)]		**N**	**–**	All except ⑨		✓	✓	✓	✓	✓	✓	–	–
With special flange next larger [10)]		**Acc. to EN 50347** **Acc. to DIN 42948**				**FT130** **C 160**	**FT130** **C 160**	**FT165** **C 200**	**FT165** **C 200**	**FT215** **C 250**	**–** **–**	**–** **–**	**–** **–**
IM B14 [2) 8)]	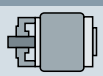	**K**	**P01**	All	All	✓	✓	✓	✓	✓	–	–	–
IM V19 [2)]		**L**	**P01**	All	All	✓	✓	✓	✓	✓	–	–	–
IM V18 without protective cover [2)]	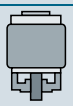	**M**	**P01**	All	All	✓	✓	✓	✓	✓	–	–	–
IM V18 with protective cover [2) 4) 5) 6)]	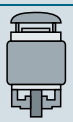	**M**	**P01+H00**	All except ②, ⑧ and in combination with order code F90		✓	✓	✓	✓	✓	–	–	–
IM B34 [3)]	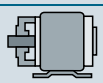	**N**	**P01**	All except ③ and ⑨		✓	✓	✓	✓	✓	–	–	–

For legends and footnotes, see page 2/71.

© Siemens AG 2017

Types of construction		Type of construction letter 14th position of the Article No.	For types of construction with order code(s) Article No. with additional identification code **-Z**	Motor category / Motor version	Motor type (aluminum)	Motor type – frame size 80	90	100	112	132	160	180	200
				IE2 High Efficiency	1LE1001	**1LE1001** ①							
					1PC1001			**1PC1001** ②					
					1LE1041	**1LE1041 APAC Line** ③							
				IE3 Premium Efficiency	1LE1003	**1LE1003** ④							
					1LE1043	**1LE1043 APAC Line** ⑤							
				IE4 Super Premium Efficiency	1LE1004			**1LE1004** ⑥					
				IE1 Standard Efficiency	1LE1002	**1LE1002** ⑦							
					1PC1002			**1PC1002** ⑧					
				NEMA Energy Efficient	1LE1021		**1LE1021 Eagle Line** ⑨						
				NEMA Premium Efficient	1LE1023	**1LE1023 Eagle Line** ⑩							
				Pole-changing	1LE1011			**1LE1011** ⑪					
					1LE1012			**1LE1012** ⑫					
1LE10 . . - . . . . . - . ■ . . (-Z)				Motor version	Motor type	Frame size 80	90	100	112	132	160	180	200
1PC10 . . - . . . . . - . ■ . . (-Z)			Order code										
With special flange next smaller		**Acc. to EN 50347**				–	–	**FT115**	**FT115**	**FT130**	**FT165**	–	–
		Acc. to DIN 42948				–	–	**C 140**	**C 140**	**C 160**	**C 200**	–	–
IM B14 [2) 8)]	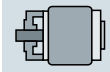	**K**	**P02**	All except ⑥		–	–	O. R.	O. R.	O. R.	O. R.	–	–
IM V19 [2)]	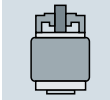	**L**	**P02**	All except ⑥		–	–	O. R.	O. R.	O. R.	O. R.	–	–
IM V18 without protective cover [2)]	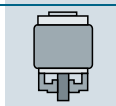	**M**	**P02**	All except ⑥		–	–	O. R.	O. R.	O. R.	O. R.	–	–
IM V18 with protective cover [2) 4) 5) 6)]	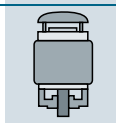	**M**	**P02+H00**	All except ②, ⑥ and ⑧ and in combination with order code F90		–	–	O. R.	O. R.	O. R.	O. R.	–	–
IM B34 [3)]	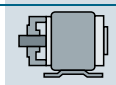	**N**	**P02**	All except ③, ⑥ and ⑨		–	–	O. R.	O. R.	O. R.	O. R.	–	–

□ Standard version
✓ With additional charge
– Not possible
O. R. Possible on request

1) The types of construction IM B6/7/8, IM V6, and IM V5 with/without protective cover are also possible as long as there are no condensation drainage holes (order code **H03**) and these types of construction do not have to be stamped on the rating plate. As standard the type of construction IM B3 is then stamped on the rating plate. With type of construction IM V5 with protective cover, the protective cover has to be additionally ordered with order code **H00**. The protective cover is not stamped on the rating plate.

2) The type of construction is stamped on the rating plate. When ordering with condensation drainage holes (order code **H03**), if mounted in a different position, the position must be specified to ensure that the condensation drainage holes are positioned correctly.

3) For North America export version Eagle Line 1LE1021 NEMA Energy Efficient, types of construction with feet are not possible for 2-pole, 4-pole and 6-pole motors ≤ 200 hp in accordance with NEMA MG1 Table 12-11.

4) The "Standard cylindrical shaft extension (second shaft extension)" option (order code **L05**) is not possible.

5) In combination with an encoder it is not necessary to order the protective cover (order code **H00**), as this is delivered as a protection for the encoder as standard. In this case the protective cover is standard version (without additional charge).

6) Not possible for 1PC1 naturally cooled motors and 1LE1 forced-air cooled motors with order code **F90** without external fan and fan cover.

7) The types of construction IM V3 and IM V1 with/without protective cover are also possible as long as there are no condensation drainage holes (order code **H03**) and these types of construction do not have to be stamped on the rating plate. As standard the type of construction IM B5 is then stamped on the rating plate. With type of construction IM V1 with protective cover, the protective cover has to be additionally ordered with order code **H00**. The protective cover is not stamped on the rating plate.

8) The types of construction IM V19 and IM V18 with/without protective cover are also possible as long as there are no condensation drainage holes (order code **H03**) and these types of construction do not have to be stamped on the rating plate. As standard the type of construction IM B14 is then stamped on the rating plate. With type of construction IM V18 with protective cover, the protective cover has to be additionally ordered with order code **H00**. The protective cover is not stamped on the rating plate.

9) When ordering frame size B7 and the required cable outlet below, option **R12** must also be ordered.

10) For the standard EN 50347, flanges which are 2 levels larger are used in frame size 80 with option **P01**.

© Siemens AG 2017

2

Selection and ordering data

Motor protection	Motor protection letter 15th position of the Article No.	Additional identification code with order code and plain text if required	Motor category									
			Motor version	**Motor type (aluminum)**	**Motor type – frame size**							
					80	**90**	**100**	**112**	**132**	**160**	**180**	**200**
			IE2 High Efficiency	1LE1001	**1LE1001**							
				1PC1001			**1PC1001**					
				1LE1041	**1LE1041 APAC Line**							
			IE3 Premium Efficiency	1LE1003	**1LE1003**							
				1LE1043	**1LE1043 APAC Line**							
			IE4 Super Premium Efficiency	1LE1004			**1LE1004**					
			IE1 Standard Efficiency	1LE1002	**1LE1002**							
				1PC1002			**1PC1002**					
			NEMA Energy Efficient	1LE1021		**1LE1021 Eagle Line**						
			NEMA Premium Efficient	1LE1023	**1LE1023 Eagle Line**							
			Pole-changing	1LE1011			**1LE1011**					
				1LE1012			**1LE1012**					
1LE10 . . - . . . . . - . . ■ .			Motor version	Motor type	Frame size							
1PC10 . . - . . . . . - . . ■ .		Order code			80	90	100	112	132	160	180	200
Motor protection												
Without (standard) [1]	**A**	**–**	All	All	□	□	□	□	□	□	□	□
1 or 3 PTC thermistors – for tripping (2 terminals) [2]	**B**	**–**	All	All	✓	✓	✓	✓	✓	✓	✓	✓
2 or 6 PTC thermistors – for warning and tripping (4 terminals) [2]	**C**	**–**	All	All	✓	✓	✓	✓	✓	✓	✓	✓
1 temperature sensor KTY84-130 (2 terminals) [2]	**F**	**–**	All	All	✓	✓	✓	✓	✓	✓	✓	✓
2 temperature sensors KTY84-130 (4 terminals) [2]	**G**	**–**	All	All	✓	✓	✓	✓	✓	✓	✓	✓
3 Pt100 resistance thermometers – 2-wire input (6 terminals) [2]	**H**	**–**	All	All	–	–	✓	✓	✓	✓	✓	✓
1 Pt1000 resistance thermometer (2 terminals) [3]	**K** *New!*	**–**	All	All	✓	✓	✓	✓	✓	✓	✓	✓
2 Pt1000 resistance thermometers (4 terminals) [3]	**L** *New!*	**–**	All	All	✓	✓	✓	✓	✓	✓	✓	✓
3 NTC thermistors – for tripping (6 terminals) [2]	**Z**	**Q2A**	All	All	–	–	✓	✓	✓	✓	–	–
3 bimetal sensors (NC contact) – for tripping (2 terminals) [2]	**Z**	**Q3A**	All	All	✓	✓	✓	✓	✓	✓	✓	✓

□ Standard version
✓ With additional charge
– Not possible

[1] Frame sizes 80 and 90 with voltage code 02 can only be supplied without motor protection (motor protection code A).

[2] Evaluation with appropriate tripping unit (see Catalog IC 10) is recommended. For pole-changing motors with two separate windings, double the number of temperature sensors or temperature detectors is required. This also results in a double additional charge.

[3] Not UL certified. Not in combination with option **D31**.

© Siemens AG 2017

Terminal box position · Aluminum series 1LE10, 1PC10

Selection and ordering data

Terminal box position	Terminal box position code 16th position of the Article No.	Additional identification code with order code and plain text if required	Motor category: Motor version	Motor type (aluminum)	Motor type – frame size 80	90	100	112	132	160	180	200
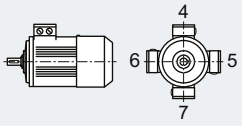			IE2 High Efficiency	1LE1001	**1LE1001**							
				1PC1001			**1PC1001**					
				1LE1041	**1LE1041 APAC Line**							
			IE3 Premium Efficiency	1LE1003	**1LE1003**							
				1LE1043	**1LE1043 APAC Line**							
			IE4 Super Premium Efficiency	1LE1004			**1LE1004**					
			IE1 Standard Efficiency	1LE1002	**1LE1002**							
				1PC1002			**1PC1002**					
			NEMA Energy Efficient	1LE1021		**1LE1021 Eagle Line**						
			NEMA Premium Efficient	1LE1023	**1LE1023 Eagle Line**							
			Pole-changing	1LE1011			**1LE1011**					
				1LE1012			**1LE1012**					
1LE10 . . - . . . . . - . . . ■			Motor version	Motor type	Frame size 80	90	100	112	132	160	180	200
1PC10 . . - . . . . . - . . . ■		Order code										
Terminal box position												
Terminal box top [1]	**4**	–	All	All	□	□	□	□	□	□	□	□
Terminal box right-hand side [2]	**5**	–	All	All	✓	✓	✓	✓	✓	✓	✓	✓
Terminal box left-hand side [2]	**6**	–	All	All	✓	✓	✓	✓	✓	✓	✓	✓
Terminal box at bottom [2] [3]	**7**	–	All	All	–	–	✓	✓	✓	✓	–	–

□ Standard version
✓ With additional charge
– Not possible

[1] For types of construction with feet up to and including frame size 160, cast feet are standard. Screwed-on feet are available with order code **H01**. Frame sizes 180 and 200 are fitted as standard with screwed-on feet.

[2] For types of construction with feet, screwed-on feet are standard.

[3] Not generally possible for motors with feet.

© Siemens AG 2017

2

Selection and ordering data

Special versions	Additional identification code **-Z** with order code and plain text if required	Motor category								
		Motor version	**Motor type (aluminum)**	**Motor type – frame size** 80	90	100	112	132	160	180	200
		IE2 High Efficiency	1LE1001	**1LE1001** ①							
			1PC1001			**1PC1001** ②					
			1LE1041	**1LE1041 APAC Line** ③							
		IE3 Premium Efficiency	1LE1003	**1LE1003** ④							
			1LE1043	**1LE1043 APAC Line** ⑤							
		IE4 Super Premium Efficiency	1LE1004			**1LE1004** ⑥					
		IE1 Standard Efficiency	1LE1002	**1LE1002** ⑦							
			1PC1002			**1PC1002** ⑧					
		NEMA Energy Efficient	1LE1021		**1LE1021 Eagle Line** ⑨						
		NEMA Premium Efficient	1LE1023	**1LE1023 Eagle Line** ⑩							
		Pole-changing	1LE1011			**1LE1011** ⑪					
			1LE1012			**1LE1012** ⑫					
1LE10 . . - . . . . . - . . . . -Z **1PC10 . . - . . . . . - . . . . -Z**	Order code	Motor version	Motor type	Frame size 80	90	100	112	132	160	180	200
Motor protection											
1 Pt1000 resistance thermometer (2 terminals) [40]	**Q35** *New!*	All	All	✓	✓	✓	✓	✓	✓	✓	✓
2 Pt1000 resistance thermometers (4 terminals) [40]	**Q36** *New!*	All	All	✓	✓	✓	✓	✓	✓	✓	✓
Motor connection and terminal box											
External grounding	**H04**	All	All	✓	✓	✓	✓	✓	✓	✓	✓
Terminal box on NDE [3]	**H08**	All	All	✓	✓	✓	✓	✓	✓	✓	✓
Rotation of the terminal box through 90°, entry from DE [1]	**R10**	All	All	○	○	○	○	○	○	✓	✓
Rotation of the terminal box through 90°, entry from NDE	**R11**	All	All	○	○	○	○	○	○	✓	✓
Rotation of the terminal box by 180°	**R12**	All	All	○	○	○	○	○	○	✓	✓
One metal cable gland	**R15**	All	All	✓	✓	✓	✓	✓	✓	✓	✓
Metal cable gland, maximum configuration	**R18**	All	All	–	–	–	–	–	–	✓	✓
3 cables protruding, 0.5 m long [4][5]	**R20**	All except ⑪ and ⑫		✓	✓	✓	✓	✓	✓	–	–
3 cables protruding, 1.5 m long [4][5]	**R21**	All except ⑪ and ⑫		✓	✓	✓	✓	✓	✓	O. R.	O. R.
6 cables protruding, 0.5 m long [4]	**R22**	All	All	✓	✓	✓	✓	✓	✓	–	–
6 cables protruding, 1.5 m long [4]	**R23**	All	All	✓	✓	✓	✓	✓	✓	O. R.	O. R.
6 cables protruding, 3 m long [4]	**R24**	All	All	✓	✓	✓	✓	✓	✓	O. R.	O. R.
Reduction piece for M cable gland in accordance with British Standard, both cable entries mounted [2]	**R30**	All	All	–	–	✓	✓	✓	✓	–	–
Larger terminal box	**R50**	All, standard version for Eagle Line ⑨ and ⑩ < frame size 100		✓	✓	✓	✓	✓	✓	✓	✓
Auxiliary terminal box, aluminum	**R60**	All	All	–	–	–	–	–	–	✓	✓
Motor connector Han-Drive 10e for 230 VΔ/400 VY [30]	**R70**	All	All	✓	✓	✓	✓	✓	–	–	–
Motor connector Han-Drive 10e EMC for 230 VΔ/400 VY [30]	**R71**	All	All	✓	✓	✓	✓	✓	–	–	–
Small motor connector CQ12 with EMC	**R72**	All	All	✓	✓	–	–	–	–	–	–
Small motor connector CQ12 without EMC	**R73**	All	All	✓	✓	–	–	–	–	–	–
6-piece terminal board	**R76**	All, only possible for 2 and 4-pole motors		○	○	–	–	–	–	–	–
Windings and insulation											
Temperature class 155 (F), utilized acc. to 155 (F), with service factor (SF)	**N01**	All	All	–	–	✓	✓	✓	✓	✓	✓
Temperature class 155 (F), utilized acc. to 155 (F), with increased power	**N02**	All	All	–	–	✓	✓	✓	✓	✓	✓
Temperature class 155 (F), utilized acc. to 155 (F), with increased coolant temperature	**N03**	All	All	✓	✓	✓	✓	✓	✓	✓	✓
Temperature class 155 (F), utilized acc. to 130 (B), coolant temperature 45 °C, derating approx. 4 %	**N05**	All	All	✓	✓	✓	✓	✓	✓	✓	✓
Temperature class 155 (F), utilized acc. to 130 (B), coolant temperature 50 °C, derating approx. 8 %	**N06**	All	All	✓	✓	✓	✓	✓	✓	✓	✓

For legends and footnotes, see page 2/85.

© Siemens AG 2017

Special versions	Additional identification code **-Z** with order code and plain text if required	Motor category								
		Motor version	**Motor type (aluminum)**	**Motor type – frame size** 80	90	100	112	132	160	180	200
		IE2 High Efficiency	1LE1001	**1LE1001** ①							
			1PC1001			**1PC1001** ②					
			1LE1041	**1LE1041 APAC Line** ③							
		IE3 Premium Efficiency	1LE1003	**1LE1003** ④							
			1LE1043	**1LE1043 APAC Line** ⑤							
		IE4 Super Premium Efficiency	1LE1004			**1LE1004** ⑥					
		IE1 Standard Efficiency	1LE1002	**1LE1002** ⑦							
			1PC1002			**1PC1002** ⑧					
		NEMA Energy Efficient	1LE1021		**1LE1021 Eagle Line** ⑨						
		NEMA Premium Efficient	1LE1023	**1LE1023 Eagle Line** ⑩							
		Pole-changing	1LE1011			**1LE1011** ⑪					
			1LE1012			**1LE1012** ⑫					
1LE10 . . - . . . . . - . . . . -Z **1PC10 . . - . . . . . - . . . . -Z**	Order code	Motor version	Motor type	Frame size 80	90	100	112	132	160	180	200
Windings and insulation (continued)											
Temperature class 155 (F), utilized acc. to 130 (B), coolant temperature 55 °C, derating approx. 13 %	**N07**	All	All	✓	✓	✓	✓	✓	✓	✓	✓
Temperature class 155 (F), utilized acc. to 130 (B), coolant temperature 60 °C, derating approx. 18 %	**N08**	All	All	✓	✓	✓	✓	✓	✓	✓	✓
Temperature class 180 (H) [31]	**N10**	All except ③, ⑤, ⑥, ⑨ and ⑩		✓	✓	–	–	–	–	–	–
Temperature class 180 (H) at rated power and max. CT 60 °C [6] [31]	**N11**	All except ⑥		✓	✓	✓	✓	✓	✓	✓	✓
Increased air humidity/temperature with 30 to 60 g water per m^3 of air	**N30** *New!*	All	All	✓	✓	✓	✓	✓	✓	✓	✓
Increased air humidity/temperature with 60 to 100 g water per m^3 of air	**N31** *New!*	All	All	✓	✓	✓	✓	✓	✓	✓	✓
Temperature class 155 (F), utilized acc. to 130 (B), with higher coolant temperature and/or installation altitude	**Y50** • and spec. power, CT .. °C or IA .... m above sea level	All	All	✓	✓	✓	✓	✓	✓	✓	✓
Temperature class 155 (F), utilized acc. to 155 (F), other requirements	**Y52** • and customer specifications	All	All	✓	✓	✓	✓	✓	✓	✓	✓
Temperature class 180 (H), utilized according to 155 (F), other requirements	**Y75** • and spec. power, CT .. °C or IA .... m above sea level	All except ⑥		–	–	O. R.	O. R.	O. R.	O. R.	–	–
Colors and paint finish											
Standard paint finish C2 in RAL 7030 stone gray		All	All	◘	◘	◘	◘	◘	◘	◘	◘
Unpainted (only cast-iron parts primed)	**S00**	All	All	○	○	○	○	○	○	○	○
Unpainted, only primed	**S01**	All	All	✓	✓	✓	✓	✓	✓	✓	✓
Special paint finish C3	**S02**	All	All	✓	✓	✓	✓	✓	✓	✓	✓
Special paint finish sea air resistant	**S03**	All	All	✓	✓	✓	✓	✓	✓	✓	✓
Top coat polyurethane [34]	**S06**	All	All	✓	✓	✓	✓	✓	✓	✓	✓
Paint finish in other standard RAL colors: RAL 1002, 1013, 1015, 1019, 2003, 2004, 3000, 3007, 5007, 5009, 5010, 5012, 5015, 5017, 5018, 5019, 6011, 6019, 6021, 7000, 7001, 7004, 7011, 7016, 7022, 7031, 7032, 7033, 7035, 9001, 9002, 9005 (see Catalog Section 1 "Introduction")	**Y53** • and paint finish RAL....	All	All	✓	✓	✓	✓	✓	✓	✓	✓
Paint finish in special RAL colors: For RAL colors, see "Special paint finish in special RAL colors" (see Catalog Section 1 "Introduction")	**Y56** • and paint finish RAL....	All	All	✓	✓	✓	✓	✓	✓	✓	✓
Modular technology – Basic versions [7]											
Mounting of holding brake (standard assignment) [8] [28]	**F01**	All except ②, ⑧ and in combination with order code F90		✓	✓	✓	✓	✓	✓	✓	✓
Mounting of brake for higher switching frequency (operating brake)	**F02**	All	All	O. R.	O. R.	O. R.	O. R.	O. R.	O. R.	–	–
Mounting of separately driven fan [29]	**F70**	All except ②, ⑧ and in combination with order code F90		✓	✓	✓	✓	✓	✓	✓	✓

For legends and footnotes, see page 2/85.

© Siemens AG 2017

2

Special versions	Additional identification code **-Z** with order code and plain text if required	Motor category								
		Motor version	**Motor type (aluminum)**	**Motor type – frame size**						
				80	**90**	**100**	**112**	**132**	**160**	**180**	**200**
		IE2 High Efficiency	1LE1001	**1LE1001** ①							
			1PC1001			**1PC1001** ②					
			1LE1041	**1LE1041 APAC Line** ③							
		IE3 Premium Efficiency	1LE1003	**1LE1003** ④							
			1LE1043	**1LE1043 APAC Line** ⑤							
		IE4 Super Premium Efficiency	1LE1004			**1LE1004** ⑥					
		IE1 Standard Efficiency	1LE1002	**1LE1002** ⑦							
			1PC1002			**1PC1002** ⑧					
		NEMA Energy Efficient	1LE1021		**1LE1021 Eagle Line** ⑨						
		NEMA Premium Efficient	1LE1023	**1LE1023 Eagle Line** ⑩							
		Pole-changing	1LE1011			**1LE1011** ⑪					
			1LE1012			**1LE1012** ⑫					
1LE10 . . - . . . . . - . . . . -Z **1PC10 . . - . . . . . - . . . . -Z**	Order code	Motor version	Motor type	Frame size							
				80	90	100	112	132	160	180	200
Modular technology – Basic versions [7] (continued)											
Mounting of 1XP8012-10 (HTL) rotary pulse encoder [9] [10]	**G01**	All except ②, ⑧ and in combination with order code F90		✓	✓	✓	✓	✓	✓	✓	✓
Mounting of 1XP8012-20 (TTL) rotary pulse encoder [9] [10]	**G02**	All except ②, ⑧ and in combination with order code F90		✓	✓	✓	✓	✓	✓	✓	✓
Mounting of Kübler Sendix 5020 HTL rotary pulse encoder, 1024 I	**G11** *New!*	All	All	✓	✓	✓	✓	✓	✓	✓	✓
Mounting of Kübler Sendix 5020 TTL rotary pulse encoder, 1024 I	**G12** *New!*	All	All	✓	✓	✓	✓	✓	✓	✓	✓
Modular technology – Additional versions											
Brake supply voltage 24 V DC	**F10**	All except ②, ⑧ and in combination with order code F90		✓	✓	✓	✓	✓	✓	✓	✓
Brake supply voltage 230 V AC, 50/60 Hz	**F11**	All except ②, ⑧ and in combination with order code F90		✓	✓	○	○	○	○	○	○
Brake supply voltage 400 V AC, 50/60 Hz	**F12**	All except ②, ⑧ and in combination with order code F90		✓	✓	✓	✓	✓	✓	✓	✓
Mechanical manual brake release with lever (no locking)	**F50**	All except ②, ⑧ and in combination with order code F90		✓	✓	✓	✓	✓	✓	✓	✓
Special technology [7]											
Mounting of LL 861 900 220 rotary pulse encoder [9]	**G04**	All except ②, ⑧ and in combination with order code F90		–	–	✓	✓	✓	✓	✓	✓
Mounting of HOG 9 D 1024 I rotary pulse encoder [9]	**G05**	All except ②, ⑧ and in combination with order code F90		–	–	✓	✓	✓	✓	✓	✓
Mounting of HOG 10 D 1024 I rotary pulse encoder [9]	**G06**	All except ②, ⑧ and in combination with order code F90		–	–	✓	✓	✓	✓	✓	✓
Mechanical version and degrees of protection											
Low-noise version for 2-pole motors with clockwise direction of rotation	**F77**	All except ②, ⑧ and in combination with order code F90		–	–	–	–	✓	✓	✓	✓
Low-noise version for 2-pole motors with counter-clockwise direction of rotation	**F78**	All except ②, ⑧ and in combination with order code F90		–	–	–	–	✓	✓	✓	✓
Prepared for mounted components, centering hole only [10]	**G40**	All except ②, ⑧ and in combination with order code F90		✓	✓	✓	✓	✓	✓	□	□
Prepared for mountings with D12 shaft [15]	**G41**	All except ②, ⑧ and in combination with order code F90		✓	✓	✓	✓	✓	✓	✓	✓
Prepared for mountings with D16 shaft [15]	**G42**	All except ②, ⑧ and in combination with order code F90		O. R.	O. R.	✓	✓	✓	✓	✓	✓
Protective cover for encoder (pre-assembled or supplied loose depending on frame size)	**G43**	All except ②, ⑧ and in combination with order code F90		✓	✓	✓	✓	✓	✓	✓	✓
Protective cover [9] [11]	**H00**	All except ②, ⑧ and in combination with order code F90		✓	✓	✓	✓	✓	✓	✓	✓
Screwed-on (instead of cast) feet	**H01**	All	All	✓	✓	✓	✓	✓	✓	□	□
Vibration-proof version; vibration resistance to Class 3M4 according to IEC 60721-3-3:1994 [39]	**H02**	All	All	✓	✓	✓	✓	✓	✓	✓	✓
Condensation drainage holes [14]	**H03**	All	All	✓	✓	✓	✓	✓	✓	✓	✓
Rust-resistant screws (externally)	**H07**	All	All	✓	✓	✓	✓	✓	✓	✓	✓
Housing with screw mounting [32]	**H10**	Only possible for ① and ③ (frame sizes 80 and 90), ④, ⑤, ⑨ and ⑩		✓	✓	–	–	–	–	✓	✓
IP65 degree of protection [13]	**H20**	All	All	✓	✓	✓	✓	✓	✓	✓	✓
IP56 degree of protection [12]	**H22**	All	All	✓	✓	✓	✓	✓	✓	✓	✓
Drive-end seal for flange-mounting motors, oil-tight to 0.1 bar [16]	**H23**	All	All	✓	✓	✓	✓	✓	✓	✓	✓
Coolant temperature and installation altitude											
Coolant temperature –40 to +40 °C [16] [28]	**D03**	All	All	✓	✓	✓	✓	✓	✓	✓	✓

For legends and footnotes, see page 2/85.

© Siemens AG 2017

Special versions	Additional identification code **-Z** with order code and plain text if required	Motor category								
		Motor version	**Motor type (aluminum)**	**Motor type – frame size**						
				80	**90**	**100**	**112**	**132**	**160**	**180**	**200**
		IE2 High Efficiency	1LE1001	**1LE1001** ①							
			1PC1001			**1PC1001** ②					
			1LE1041	**1LE1041 APAC Line** ③							
		IE3 Premium Efficiency	1LE1003	**1LE1003** ④							
			1LE1043	**1LE1043 APAC Line** ⑤							
		IE4 Super Premium Efficiency	1LE1004			**1LE1004** ⑥					
		IE1 Standard Efficiency	1LE1002	**1LE1002** ⑦							
			1PC1002			**1PC1002** ⑧					
		NEMA Energy Efficient	1LE1021		**1LE1021 Eagle Line** ⑨						
		NEMA Premium Efficient	1LE1023	**1LE1023 Eagle Line** ⑩							
		Pole-changing	1LE1011			**1LE1011** ⑪					
			1LE1012			**1LE1012** ⑫					
1LE10 . . - . . . . . - . . . . -Z **1PC10 . . - . . . . . - . . . . -Z**	Order code	Motor version	Motor type	Frame size							
				80	90	100	112	132	160	180	200
Coolant temperature and installation altitude (continued)											
Coolant temperature –30 to +40 °C [16) 28)]	**D04**	All	All	✓	✓	✓	✓	✓	✓	✓	✓
Versions in accordance with standards and specifications											
VIK version	**C02**	Only possible for ① and ④		✓	✓	✓	✓	✓	✓	–	–
CCC China Compulsory Certification [17)]	**D01** *New!*	All	All	✓	✓	–	–	–	–	–	–
Motor without CE marking for export outside EEA (see EU Directive 640/2009)	**D22**	Only possible for ①, ②, ⑦ and ⑧		–	–	○	○	○	○	○	○
Electrical according to NEMA MG1-12 [18)]	**D30**	All, standard version for ⑨ and ⑩		✓	✓	✓	✓	✓	✓	✓	✓
Version according to UL with "Recognition Mark" [19)]	**D31**	All, standard version for ⑨ and ⑩		✓	✓	✓	✓	✓	✓	✓	✓
KEMCO Korea Energy Efficiency Label	**D33**	Only possible for ③ and ⑤		○	○	○	○	○	○	○	○
China Energy Efficiency Label [38)]	**D34**	Only possible for ①, ③, ④, ⑤, ⑥, ⑨, and ⑩		○	○	○	○	○	○	○	○
Canadian regulations (CSA) [33) 37)]	**D40**	All, standard version for ⑨ and ⑩; not possible for ⑦, ⑧, ⑪ and ⑫		✓	✓	✓	✓	✓	✓	✓	✓
TR CU product safety certificate EAC for Eurasian customs union [35)]	**D47**	All	All	✓	✓	✓	✓	✓	✓	✓	✓
Version suitable for railways IC 411, EN IEC 60349, without EN 45545, with external fan and fan cover in plastic	**L90** *New!*	All	All	✓	✓	✓	✓	✓	✓	✓	✓
Version suitable for railways IC 411, EN IEC 60349, with EN 45545, with external fan and fan cover in metal	**L91** *New!*	All	All	✓	✓	✓	✓	✓	✓	✓	✓
Version suitable for railways IC 418, EN IEC 60349, without EN 45545, without external fan and fan cover	**L92** *New!*	All	All	✓	✓	✓	✓	✓	✓	✓	✓
Bearings and lubrication											
Regreasing device with M10 × 1 grease nipple according to DIN 71412-A	**L19**	All	All	–	–	–	–	–	–	✓	✓
Fixed bearing DE	**L20**	All	All	✓	✓	✓	✓	✓	✓	✓	✓
Fixed bearing NDE	**L21**	All	All	✓	✓	✓	✓	✓	□	□	□
Bearing design for increased cantilever forces [36)]	**L22**	All	All	✓	✓	✓	✓	✓	✓	✓	✓
Regreasing device [20)]	**L23**	All	All	–	–	✓	✓	✓	✓	✓	✓
Bearings reinforced at both ends for DE and NDE, bearing size 63	**L25**	All	All	✓	✓	✓	✓	✓	✓	✓	✓
Measuring nipple for SPM shock pulse measurement for bearing inspection [20)]	**Q01**	All	All	–	–	✓	✓	✓	✓	✓	✓
Balance and vibration quantity											
Vibration quantity level A		All	All	□	□	□	□	□	□	□	□
Vibration quantity level B	**L00**	All	All	✓	✓	✓	✓	✓	✓	✓	✓
Half-key balancing (standard)		All	All	□	□	□	□	□	□	□	□
Balancing without key	**L01**	All	All	✓	✓	✓	✓	✓	✓	✓	✓
Full-key balancing	**L02**	All	All	✓	✓	✓	✓	✓	✓	✓	✓
Shaft and rotor											
Shaft extension with standard dimensions without feather keyway	**L04**	All	All	–	–	✓	✓	✓	✓	✓	✓
Standard cylindrical shaft extension (second shaft end) NDE acc. to EN 50347	**L05**	All except ②, ⑧ and in combination with order code F90		✓	✓	✓	✓	✓	✓	✓	✓
Standard shaft made of stainless steel (e.g. 1.4021)	**L06**	All	All	✓	✓	✓	✓	✓	✓	✓	✓
Concentricity of shaft extension in acc. with DIN 42955 Tolerance R	**L07**	All	All	✓	✓	✓	✓	✓	✓	✓	✓

For legends and footnotes, see page 2/85.

© Siemens AG 2017

2

Special versions	Additional identification code **-Z** with order code and plain text if required	Motor category								
		Motor version	**Motor type (aluminum)**	**Motor type – frame size** 80	90	100	112	132	160	180	200
		IE2 High Efficiency	1LE1001	**1LE1001** ①							
			1PC1001			**1PC1001** ②					
			1LE1041	**1LE1041 APAC Line** ③							
		IE3 Premium Efficiency	1LE1003	**1LE1003** ④							
			1LE1043	**1LE1043 APAC Line** ⑤							
		IE4 Super Premium Efficiency	1LE1004			**1LE1004** ⑥					
		IE1 Standard Efficiency	1LE1002	**1LE1002** ⑦							
			1PC1002			**1PC1002** ⑧					
		NEMA Energy Efficient	1LE1021		**1LE1021 Eagle Line** ⑨						
		NEMA Premium Efficient	1LE1023	**1LE1023 Eagle Line** ⑩							
		Pole-changing	1LE1011			**1LE1011** ⑪					
			1LE1012			**1LE1012** ⑫					
1LE10 . . - . . . . . - . . . . -Z **1PC10 . . - . . . . . - . . . . -Z**	Order code	Motor version	Motor type	Frame size 80	90	100	112	132	160	180	200
Shaft and rotor (continued)											
Concentricity of shaft extension, coaxiality, and linear movement in accordance with DIN 42955 Tolerance R for flange-mounting motors	**L08**	All	All	✓	✓	✓	✓	✓	✓	✓	✓
Non-standard shaft extension, DE [21]	**Y58** • and customer specifications	All	All	✓	✓	✓	✓	✓	✓	✓	✓
Non-standard shaft extension, NDE [21]	**Y59** • and customer specifications	All	All	✓	✓	✓	✓	✓	✓	✓	✓
Heating and ventilation											
Sheet metal fan cover	**F74**	All except ②, ⑧ and in combination with order code F90		✓	✓	✓	✓	✓	✓	✓	✓
Fan cover for textile industry [22]	**F75**	All except ②, ⑧ and in combination with order code F90		✓	✓	✓	✓	✓	✓	✓	✓
Metal external fan [23] [29]	**F76**	All except ②, ⑧ and in combination with order code F90		✓	✓	✓	✓	✓	✓	✓	✓
Without external fan and without fan cover	**F90**	All except ②, ⑧, ⑪ and ⑫		✓	✓	✓	✓	✓	✓	✓	✓
Anti-condensation heating for 230 V (2 terminals)	**Q02**	All	All	✓	✓	✓	✓	✓	✓	✓	✓
Anti-condensation heating for 115 V (2 terminals)	**Q03**	All	All	✓	✓	✓	✓	✓	✓	✓	✓
Rating plate and additional rating plates											
Additional rating plate for voltage tolerance [24]	**B07**	All except ②, ⑧, ⑪, ⑫ and 8-pole motors		✓	✓	✓	✓	✓	✓	✓	✓
Second rating plate, loose [25]	**M10**	All	All	✓	✓	✓	✓	✓	✓	✓	✓
Rating plate, stainless steel	**M11**	All	All	✓	✓	✓	✓	✓	✓	✓	✓
Additional rating plate with deviating rating plate data	**Y80** • and customer specifications	All	All	✓	✓	✓	✓	✓	✓	✓	✓
Additional rating plate with customer specifications	**Y82** • and customer specifications	All	All	✓	✓	✓	✓	✓	✓	✓	✓
Additional information on rating plate and on package label (max. 20 characters)	**Y84** • and customer specifications	All	All	✓	✓	✓	✓	✓	✓	✓	✓
Adhesive label, supplied loose (printed with: Article No., Serial No.; 2 lines of text)	**Y85** • and customer specifications	All	All	–	–	✓	✓	✓	✓	✓	✓
Packaging, safety notes, documentation and test certificates											
Printed German/English Operating Instructions (compact) enclosed [27]		All	All	◘	◘	◘	◘	◘	◘	◘	◘
Printed German/English Operating Instructions (compact) enclosed in each wire-lattice pallet [27]	**B01**	All	All	○	○	○	○	○	○	○	○
Acceptance test certificate 3.1 according to EN 10204 [26]	**B02**	All	All	✓	✓	✓	✓	✓	✓	✓	✓
Printed German/English Operating Instructions enclosed	**B04**	All	All	✓	✓	✓	✓	✓	✓	✓	✓
Document - Electrical data sheet	**B60**	All	All	✓	✓	✓	✓	✓	✓	✓	✓
Document - Order dimensional drawing	**B61**	All	All	✓	✓	✓	✓	✓	✓	✓	✓
Type test with heat run for horizontal motors, with acceptance	**B83**	All	All	✓	✓	✓	✓	✓	✓	✓	✓
Wire-lattice pallet packaging	**B99**	All	All	○	○	○	○	○	○	○	○
Connected in star for dispatch	**M01**	All	All	–	–	✓	✓	✓	✓	✓	✓
Connected in delta for dispatch	**M02**	All	All	–	–	✓	✓	✓	✓	✓	✓

For legends and footnotes, see page 2/85.

© Siemens AG 2017

◘ Standard version
○ Without additional charge
• This order code only determines the price of the version – Additional plain text is required.
✓ With additional charge
O. R. Possible on request
Av. soon Available soon
– Not possible

1) With IM B5 flange, only possible in combination with **H08**.

2) Not possible in combination with order code **R15** "One metal cable gland".

3) With **H08**, feet dimensions C and CA differ from EN 50347! Further information is available in DT Configurator (see Appendix, "Tools and Configuring").

4) In conjunction with motor protection (15th position of the Article No.) or anti-condensation heating option, please inquire before ordering.

5) Not possible in combination with voltage code **22** or **34**.

6) Cannot be used for motors in UL version (order code **D31**). The grease lifetime specified in Catalog Section 1 "Introduction" refers to CT 40 °C. If the coolant temperature is increased by 10 K, the grease lifetime and regreasing interval are halved.

7) A second shaft extension is not possible. Please inquire for mounted brakes.

8) For order codes **F10**, **F11**, and **F12**, the brake supply voltage must be specified or ordered.

9) All encoders are supplied with a protective cover as standard. The protective cover is omitted at the factory when a rotary pulse encoder is combined with a separately driven fan, because in this case the rotary pulse encoder is installed under the fan cover. In combination with a separately driven fan (order code **F70**) the 1XP8032-10 rotary pulse encoder is used instead of 1XP8012-10 or 1XP8032-20 is used instead of 1XP8012-20.

10) As standard, motors that are prepared for additional mounted components (order codes **G40**, **G41**, **G42**) are shipped without protective cover. If a protective cover is requested as a cover or mechanical protection for mountings provided by the customer, this can be ordered with order code G43. Not possible in combination with order code **L00** vibration quantity level B. In combination with a separately driven fan (order code **F70**) the 1XP8032-10 rotary pulse encoder is used instead of 1XP8012-10 or 1XP8032-20 is used instead of 1XP8012-20.

11) Order code **H00** provides mechanical protection for encoders.

12) Not possible in combination with brake 2LM8 – order code **F01**.

13) Not possible in combination with HOG 9 D 1024I rotary pulse encoder (order code **G05**) and/or brake 2LM8 (order code **F01**).

14) Supplied with the condensation drainage holes sealed at the drive end DE and non-drive end NDE (IP55, IP56, IP65). If the condensation drainage holes are required for motors of the IM B6, IM B7, or IM B8 type of construction (feet on side or top), the motors must be ordered in the respective type of construction and with order code **H03**, so that the condensation drainage holes will be placed in the correct position.

15) As standard, motors that are prepared for additional mounted components (order codes **G40**, **G41**, **G42**) are shipped without protective cover. If a protective cover is requested as a cover or mechanical protection for mountings provided by the customer, this can be ordered with order code G43. Not possible in combination with order code **L00** vibration quantity level B.

16) In connection with mountings, the respective technical specifications must be observed, please inquire before ordering.

17) CCC mandatory certification, see Chapter 1 page 1/24.

18) Possible up to 600 V max. The rated voltage is indicated on the rating plate without voltage range. Order codes **D30** and **D31** do not authorize importing into USA and Mexico. The North America export versions Eagle Line 1LE1021 NEMA Energy Efficient and 1LE1023 NEMA Premium Efficient are available for this purpose.

19) In connection with mountings, the respective technical specifications must be observed, please inquire before ordering.

20) Not possible when brake is mounted.

21) When motors are ordered that have a longer or shorter shaft extension than normal, the required position and length of the feather keyway must be specified in a sketch. It must be ensured that only feather keys in accordance with EN 50347, Form A are used. The feather keyway is positioned centrally on the shaft extension. The length is defined by the manufacturer in accordance with the appropriate standard. Not valid for: Conical shafts, non-standard threaded journals, non-standard shaft tolerances, friction welded journals, extremely "thin" shafts, special geometry dimensions (e.g. square journals), hollow shafts. Valid for non-standard shaft extensions DE or NDE. The feather key is always supplied. For order codes **Y58**, **Y59**, and **L05** the following applies:
– Dimensions D and DA ≤ inner diameter of roller bearing (see dimension tables under "Dimensions")
– Dimensions E and EA ≤ 2 × length E (normal) of the shaft extension.

22) The special requirements of the textile industry regarding the sheet metal cover open up the possibility that a finger may be inserted between the cover and housing. The customer must implement appropriate measures to ensure that the installed system is "finger-safe".

23) Converter operation is permitted for 1LE1 motors with metal external fans. The metal external fan is not possible in combination with the low-noise version – order code **F77** or **F78**.

24) Can be ordered for 230 VΔ/400 VY or 400 VΔ/690 VY (voltage code "**22**" or "**34**"). Not possible in combination with order code **D34**.

25) As adhesive label for frame sizes 80 and 90.

26) The delivery time for the factory test certificate may differ from the delivery time for the motor and it will be dispatched by email.

27) The Operating Instructions (compact) are available in PDF format for all official EU languages at http://support.automation.siemens.com/WW/view/en/40761976.

28) Not possible in combination with order codes **N05**, **N06**, **N07**, **N08**, and **N11**.

29) Order codes **F70** and **F76** cannot be combined.

30) When ordering with order code **R70** and **R71**, order code **R50** is included.

31) Not possible for 2-pole and 4-pole motors with increased power (11th position of the Article No.: 6) in frame sizes 80 and 90.

32) Possible with frame sizes 180 and 200 with screw-mounted fan cover.

33) For frame sizes 180 and 200, constructed with metric entry thread.

34) Order code **S06** cannot be combined with order codes **S00** and **S01**. It can be combined with **Y53** and **Y56** on request.

35) Please note the additional use of order code **D22** "Motor without CE marking for export outside EEA (see EU Regulation 640/2009)".

36) A minimum cantilever force F_{min} of 0.5 · F_{max} is required for NU bearings (cylindrical roller bearings) in contrast to ball bearings. Cylindrical roller bearings are not suitable for coupling output or for brief periods of no-load operation without cantilever force.

37) The rated voltage is indicated on the rating plate without voltage range. Order code **D40** does not authorize importing into Canada. The North America export versions Eagle Line 1LE1021 NEMA Energy Efficient and 1LE1023 NEMA Premium Efficient are available for this purpose.

38) Not possible in combination with voltage code (12th or 13th position of the Article No.) 17, 18, 30, 31, 60, 61, 62, 63, and 90 with the additional order codes **M1A; M2A; M2B; M1B; M1C; M2C; M1D; M2D; M1E; M2E; M1F; M2F; M1G; M2G; M1H; M2H; 1K; M2K; M1J; M2J; M1L; M2L; M1M; M2M;** and **M3A**.

39) Not possible in combination with order code **R50**.

40) Not UL certified. Not in combination with option **D31**.

© Siemens AG 2017

Overall dimensions

Overview

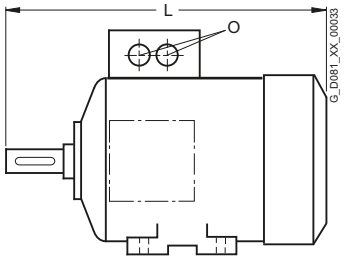

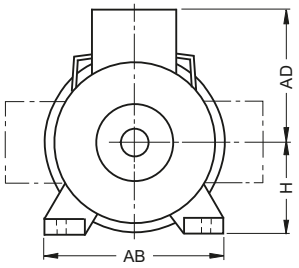

Frame size	Type	Dimension				
		L	AD	H	AB	O
71 M	Cast-iron series, self-ventilated					
	1LE1501, 1LE1521, 1LE1503-, 1LE1523-0CA2, 0CB2, 0CC2	240	149	71	132	1 × M16 × 1.5 + 1 × M25 × 1.5
	1LE1503-, 1LE1523-0CA3, 0CB3, 0CC3	280	149	71	132	1 × M16 × 1.5 + 1 × M25 × 1.5
80 M	Aluminum series, self-ventilated					
	1LE1001, 1LE1003, 1LE1023	292	121.5	80	150	1 × M25 × 1.5
	Aluminum series, self-ventilated with increased power					
	1LE1001, 1LE1002	378	121.5	80	150	1 × M25 × 1.5
	Aluminum series, forced-air cooled or naturally cooled					
	1LE1001, 1LE1023, 1LE1043	253	122	80	150	1 × M25 × 1.5
	Cast-iron series, self-ventilated					
	1LE1501, 1LE1521, 1LE1503-, 1LE1523-0DA2, 0DB2, 0DC2	292	159	80	150	1 × M16 × 1.5 + 1 × M25 × 1.5
	1LE1503-, 1LE1523-0DA3, 0DB3, 0DC3	327	159	80	150	1 × M16 × 1.5 + 1 × M25 × 1.5
90 S/ 90 L	Aluminum series, self-ventilated					
	1LE1001	347	126	90	165	1 × M25 × 1.5
	Aluminum series, self-ventilated with increased power					
	1LE1001, 1LE1002	387	126	90	165	1 × M25 × 1.5
	Aluminum series, forced-air cooled or naturally cooled					
	1LE1001, 1LE1003, 1LE1023	295	126	90	165	1 × M25 × 1.5
	Cast-iron series, self-ventilated					
	1LE1501, 1LE1521, 1LE1503-, 1LE1523-0EA0, 0EB0, 0EC0	347/387	164	90	165	1 × M16 × 1.5 + 1 × M25 × 1.5
	1LE1503-, 1LE1523-0EA4, 0EB4, 0EC4	347/387	164	90	165	1 × M16 × 1.5 + 1 × M25 × 1.5
100 L	Aluminum series, self-ventilated					
	1LE1001, 1LE1002, 1LE1003, 1LE1011, 1LE1012, 1LE1021, 1LE1023	396 [1]	166	100	196	2 × M32 × 1.5
	1LE1004	431	166	100	196	
	Aluminum series, self-ventilated with increased power					
	1LE1001, 1LE1002	431 [1]	166	100	196	2 × M32 × 1.5
	Aluminum series, forced-air cooled or naturally cooled					
	1LE1001, 1PC1001, 1LE1002, 1PC1002, 1LE1021	324	166	100	196	2 × M32 × 1.5
	Aluminum series, self-ventilated					
	1LE1003, 1LE1023	431	166	100	196	2 × M32 × 1.5
	Aluminum series, forced-air cooled					
	1LE1023	357	166	100	196	2 × M32 × 1.5
	Cast-iron series, self-ventilated					
	1LE1501, 1LE1503, 1LE1504, 1LE1521, 1LE1601, 1LE1603, 1LE1604,	397.5	193	100	196	2 × M32 × 1.5
	1LE1523, 1LE1623	425	193	100	196	2 × M32 × 1.5

Frame size	Type	Dimension				
		L	AD	H	AB	O
112 M	Aluminum series, self-ventilated					
	1LE1001, 1LE1002, 1LE1003, 1LE1011, 1LE1012, 1LE1021, 1LE1023	389 [1]	177	112	226	2 × M32 × 1.5
	1LE1004	414	177	112	226	
	Aluminum series, self-ventilated with increased power					
	1LE1001, 1LE1002	414 [1]	177	112	226	2 × M32 × 1.5
	Aluminum series, forced-air cooled or naturally cooled					
	1LE1001, 1PC1001, 1LE1002, 1PC1002, 1LE1021	311	177	112	226	2 × M32 × 1.5
	Aluminum series, self-ventilated					
	1LE1003, 1LE1023	414	177	112	226	2 × M32 × 1.5
	Aluminum series, forced-air cooled					
	1LE1023	336	177	112	226	2 × M32 × 1.5
	Cast-iron series, self-ventilated					
	1LE1501, 1LE1503, 1LE1504, 1LE1521, 1LE1601, 1LE1603, 1LE1604	390.5	195	112	226	2 × M32 × 1.5
	1LE1523, 1LE1623	415.5	195	112	226	2 × M32 × 1.5
132 S/M	Aluminum series, self-ventilated					
	1LE1001, 1LE1002, 1LE1003, 1LE1011, 1LE1012, 1LE1021, 1LE1023	465 [1]	202	132	256	2 × M32 × 1.5
	1LE1004	465/515	202	132	256	
	Aluminum series, self-ventilated with increased power					
	1LE1001, 1LE1002, 1LE1003	515 [1]	202	132	256	2 × M32 × 1.5
	Aluminum series, forced-air cooled or naturally cooled					
	1LE1001, 1PC1001, 1LE1002, 1PC1002, 1LE1021	381	202	132	256	2 × M32 × 1.5
	Aluminum series, self-ventilated					
	1LE1003-, 1LE1023-					
	1CA0, 1CC0, 1CC2	465	202	132	256	2 × M32 × 1.5
	1CA1, 1CB0, 1CB2, 1CC3	515	202	132	256	2 × M32 × 1.5
	Aluminum series, forced-air cooled					
	1LE1023-					
	1CA0, 1CC0, 1CC2	381	202	132	256	2 × M32 × 1.5
	1CA1, 1CB0, 1CB2, 1CC3	431	202	132	256	2 × M32 × 1.5
	Cast-iron series, self-ventilated					
	1LE1501, 1LE1503, 1LE1504, 1LE1521, 1LE1601, 1LE1603	466.5	214.5	132	256	2 × M32 × 1.5
	1LE1523-, LE1623-					
	1CA0, 1CC0, 1CC2	466.5	214.5	132	256	2 × M32 × 1.5
	1CA1, 1CB0, 1CB2, 1CC3	516.5	214.5	132	256	2 × M32 × 1.5

[1] The length is specified as far as the tip of the fan cover.

© Siemens AG 2017

Overview (continued)

Frame size	Type	Dimension L	AD	H	AB	O
160 M/L	Aluminum series, self-ventilated					
	1LE1001, 1LE1002, 1LE1003, 1LE1011, 1LE1012, 1LE1021, 1LE1023	604 [1) 2)]	237	160	300	2 × M40 × 1.5
	Aluminum series, self-ventilated with increased power					
	1LE1001, 1LE1002, 1LE1003	664 [1)]	237	160	300	2 × M40 × 1.5
	Aluminum series, forced-air cooled or naturally cooled					
	1LE1001, 1PC1001, 1LE1002, 1PC1002, 1LE1021	510	237	160	300	2 × M40 × 1.5
	Cast-iron series, self-ventilated					
	1LE1501, 1LE1503, 1LE1504, 1LE1521, 1LE1601, 1LE1603, 1LE1604	606	265	160	300	2 × M40 × 1.5
160 M	Aluminum series, self-ventilated					
	1LE1003, 1LE1023	604	237	160	300	2 × M40 × 1.5
	1LE1004	604	237		300	
	Aluminum series, forced-air cooled					
	1LE1023, 1LE1043	510	237	160	300	2 × M40 × 1.5
	Cast-iron series, self-ventilated					
	1LE1523, 1LE1623	596	261	160	300	2 × M40 × 1.5
160 L	Aluminum series, self-ventilated					
	1LE1003, 1LE1023	664	237	160	300	2 × M40 × 1.5
	1LE1004	664	237	160	300	
	Aluminum series, forced-air cooled					
	1LE1023, 1LE1043	570	237	160	300	2 × M40 × 1.5
	Cast-iron series, self-ventilated					
	1LE1523, 1LE1623	666	237	160	300	2 × M40 × 1.5
180 M	Aluminum series, self-ventilated					
	1LE1001, 1LE1003, 1LE1023					
	1EA2, 1EB2	699	259	180	339	2 × M40 × 1.5
	Aluminum series, forced-air cooled or naturally cooled					
	1LE1001, 1LE1021	592	259	180	339	2 × M40 × 1.5
	Cast-iron series, self-ventilated					
	1LE15.1-, 1LE16.1-, 1LE1504					
	1EA2, 1EB2	668	286	180	339	2 × M40 × 1.5
	1EA6	698				
	1LE15.3-, 1LE16.3-, 1LE1604					
	1EB2	668	286	180	339	2 × M40 × 1.5
	1EA2	698				
180 L	Aluminum series, self-ventilated					
	1LE1001					
	1EB4, 1EC4, 1ED4	699	259	180	339	2 × M40 × 1.5
	1EA6, 1EB6, 1EC6, 1ED6	698				
	Aluminum series, forced-air cooled or naturally cooled					
		642	296	180	378	2 × M40 × 1.5
	Aluminum series, self-ventilated with increased power					
	1LE1001, 1LE1002, 1LE1003	699	259	180	339	
	Cast-iron series, self-ventilated					
	1LE15.1-, 1LE16.1-, 1LE1504					
	1EC4, 1EC6	668	286	180	339	2 × M40 × 1.5
	1EB6	698				
	1LE15.3-, 1LE16.3-, 1LE1604					
	1EC4	668	286	180	339	2 × M40 × 1.5
	1EB4	698				

Frame size	Type	Dimension L	AD	H	AB	O
200 L	Aluminum series, self-ventilated					
	1LE1001, 1LE1003, 1LE1023					
	2AA4, 2AA5, 2AB5, 2AC4, 2AC5, 2AD5	746	296	200	378	2 × M50 × 1.5
	2AA6, 2AB6, 2AC6, 2AD6	746				
	Aluminum series, self-ventilated with increased power					
	1LE1001, 1LE1002, 1LE1003	746	296	180	378	
	Cast-iron series, self-ventilated					
	1LE15.1-, 1LE16.1-, 1LE1504					
	2AA4, 2AA5, 2AB5, 2AC4, 2AC5	721	315	200	378	2 × M50 × 1.5
	2AA6	746				
	1LE15.3-, 1LE16.3-, 1LE1604					
	2AA4, 2AC4	721	315	200	378	2 × M50 × 1.5
	2AA5, 2AB5, 2AC5	746				
225 S	Cast-iron series, self-ventilated					
	1LE15.1-, 1LE16.1-, 1LE1504					
	2BB0, 2BD0	788	338	225	436	2 × M50 × 1.5
	1LE15.3-, 1LE16.3-, 1LE1604					
	2BB0	788	338	225	436	2 × M50 × 1.5
225 M	Cast-iron series, self-ventilated					
	1LE15.1-, 1LE16.1-, 1LE1504					
	2BA2, 2BA6	818	338	225	436	2 × M50 × 1.5
	2BB2, 2BB6, 2BC2, 2BC6, 2BD6	848				
	1LE15.3-, 1LE16.3-, 1LE1604					
	2BA2	818	338	225	436	2 × M50 × 1.5
	2BB2, 2BC2	848				
250 M	Cast-iron series, self-ventilated					
	1LE15.1-, 1LE16.1-, 1LE1504					
	2CA2, 2CA6, 2CB2, 2CC2, 2CC6, 2CD2, 2CD6	887	410	250	490	2 × M63 × 1.5
	2CB6	957				
	1LE15.3-, 1LE16.3-, 1LE1604					
	2CA2, 2CB2, 2CC2	887	410	250	490	2 × M63 × 1.5
280 S	Cast-iron series, self-ventilated					
	1LE15.1-, 1LE16.1-, 1LE1504					
	2DA0, 2DB0, 2DC0, 2DD0	960	433	280	540	2 × M63 × 1.5
	1LE15.3, 1LE16.3, 1LE1604					
	2DA0, 2DB0, 2DC0	960	433	280	540	2 × M63 × 1.5
280 M	Cast-iron series, self-ventilated					
	1LE15.1-, 1LE16.1-, 1LE1504					
	2DA2, 2DB2, 2DC2, 2DC6, 2DD2, 2DD6	960	433	280	540	2 × M63 × 1.5
	2DA6, 2DB6	1070				
	1LE15.3-, 1LE16.3-, 1LE1604					
	2DC2	960	433	280	540	2 × M63 × 1.5
	2DA2, 2DB2	1070				

[1)] The length is specified as far as the tip of the fan cover.

[2)] Only for pole-changing types 1LE1011-1DP6 and 1LE1012-1DQ6 the dimension L is 664 mm.

© Siemens AG 2017

2

Overview (continued)

Frame size	Type	Dimension L	AD	H	AB	O
315 S	Cast-iron series, self-ventilated					
	1LE15.1-, 1LE16.1-, 1LE1504					
	3AA0	1052	515	315	610	2 × M63 × 1.5
	3AB0, 3AC0, 3AD0	1082				
	1LE15.3-, 1LE16.3-, 1LE1604					
	3AA0	1052	515	315	610	2 × M63 × 1.5
	3AB0, 3AC0	1082				
315 M	Cast-iron series, self-ventilated					
	1LE15.1-, 1LE16.1-, 1LE1504					
	3AC2, 3AD2	1082	515	315	610	2 × M63 × 1.5
	3AA2	1217				
	3AB2	1247				
	1LE15.3-, 1LE16.3-, 1LE1604					
	3AA2	1217	515	315	610	2 × M63 × 1.5
	3AB2, 3AC2	1247				
315 L	Cast-iron series, self-ventilated					
	1LE15.1-, 1LE16.1-, 1LE1504					
	3AA4	1217	515	315	610	2 × M63 × 1.5
	3AB4, 3AC4, 3AC5, 3AD4, 3AD5, 3AD6	1247				
	3AA5, 3AA6	1372				
	3AB5, 3AB6, 3AC6	1402				
	1LE15.3-, 1LE16.3-, 1LE1604					
	3AA4	1217	515	315	610	2 × M63 × 1.5
	3AB4, 3AC4	1247	515	315	610	2 × M63 × 1.5
	3AA5	1372				
	3AB5, 3AC5, 3AC6	1402				

© Siemens AG 2017

Notes on the dimensions

Overview

- Dimensional drawings according to EN 50347 and IEC 60072.
- Fits
  The shaft extensions specified in the dimension tables (DIN 748) and centering spigot diameters (EN 50347) are machined with the following fits:

Dimension designation	ISO fit DIN ISO 286-2	
D, DA	to 30	j6
	over 30 to 50	k6
	over 50	m6
N	to 250	j6
	over 250	h6
F, FA		h9
K		H17
S	Flange (FF)	H17

  The drilled holes of couplings and belt pulleys should have an ISO fit of at least H7.

- Dimension tolerances
  For the following dimensions, the admissible deviations are given below:

Dimension designation	Dimension	Permissible deviation
H	to 250	– 0.5
	over 250	– 1.0
E, EA		– 0.5

  Keyways and feather keyways (dimensions GA, GC, F, and FA) are made in compliance with DIN 6885 Part 1.
- All dimensions are specified in mm.

2

Dimension sheet generator (within the Drive Technology Configurator)

Overview

A dimensional drawing can be created in the Drive Technology (DT) Configurator for every configurable motor. A dimensional drawing can be requested for every other motor.

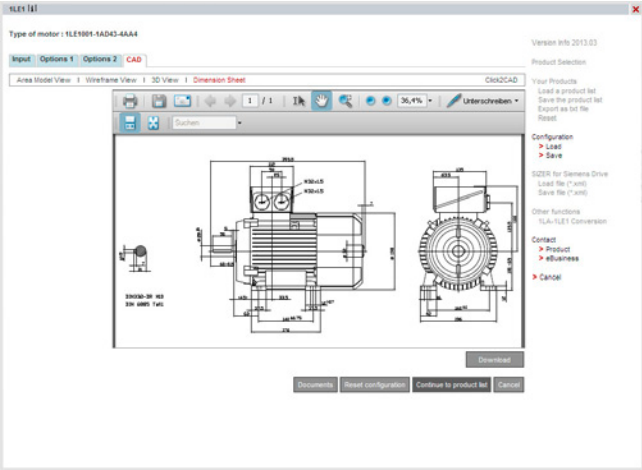

When a complete Article No. is entered or configured with or without order codes, a dimensional drawing can be called up under the "Documentation" tab.
These dimensional drawings can be presented in different views and sections and printed.
The corresponding dimension sheets can be exported, saved and processed further in DXF format (interchange/import format for CAD systems) or as a bitmap graphic.

Online access in the Siemens Industry Mall

The DT Configurator is integrated in the Siemens Industry Mall and can be used on the Internet without installation.
German: www.siemens.de/dt-konfigurator
English: www.siemens.com/dt-configurator

Offline access in the Interactive Catalog CA 01

The DT Configurator is also part of the Interactive Catalog CA 01 on DVD – the offline version of Siemens Industry Mall. CA 01 can be ordered from the relevant Siemens sales office or via the Internet: www.siemens.com/automation/CA01

© Siemens AG 2017

2

Dimensional drawings

Type of construction IM B3

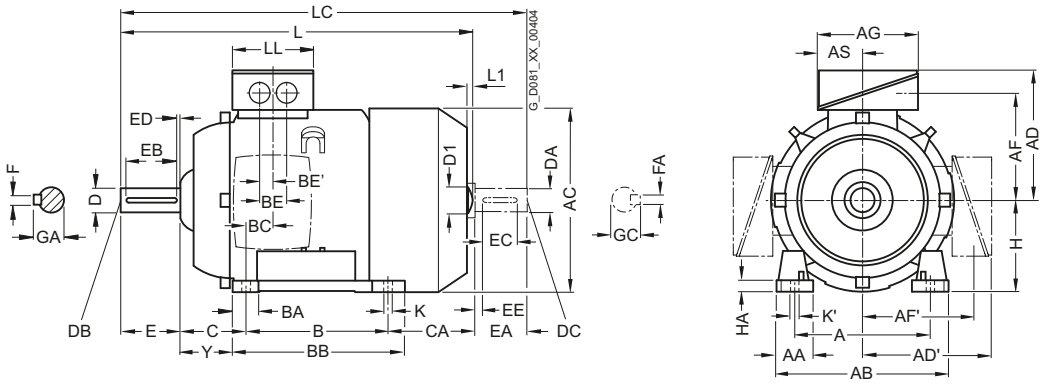

Types of construction IM B5 and IM V1

For flange dimensions, see page 1/39 (**Z** = the number of retaining holes)

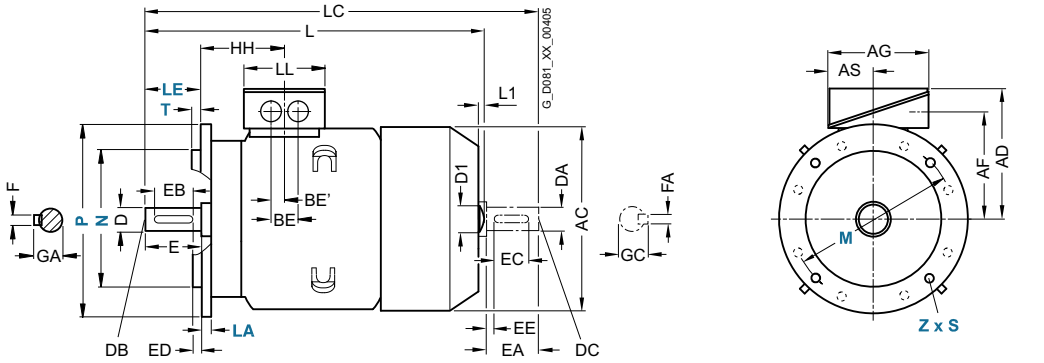

For motor			Dimension designation acc. to **IEC**																			
Frame size	Motor type	No. of poles	A	AA	AB	AC	AD	AD'	AF	AF'	AG	AS	B	BA	BB	BC	BE	BE'	C	CA	H	HA	Y
80 M	1LE1003-0DA2, -0DB2, -0DC2 -0DA3, -0DB3, -0DC3	2, 4, 6	125	30.5	150	159	121.5	121.5	96.5	96.5	93	43	100	32	118	23	–[1]	18[1]	50	113 148	80	8	41
	1LE1043-0DA2,	2																					
	1LE1023-0DA2, -0DB2, -0DC2 -0DA3, -0DB3, -0DC3	2, 4, 6					149.5	149.5	112	112	119.5	61.5								113 148			
90 S	1LE1003-0EA0, -0EB0, -0EC0	2, 4, 6	140	30.5	165	178	126	126	101.5	101.5	93	43	100	33	143	22.5	–[1]	18[1]	56	159	90	10	47
	1LE1043-0EA0,	2																					
	1LE1023-0EA0, -0EB0, -0EC0	2, 4, 6					154.5		117.5	117	119.5	61.5											
90 L	1LE1003-0EA4, -0EB4, -0EC4	2, 4, 6	140	30.5	165	178	126	126	101.5	101.5	93	43	125	33	143	22.5	–[1]	18[1]	56	154	90	10	47
	1LE1043-0EA4, -0EB4	2, 4																					
	1LE1023-0EA4, -0EB4, -0EC4	2, 4, 6					154.5		117.5	117.5	119.5	61.5											

[1] Only one termination hole available, except for 1LE1023.
In this case, the dimension BE is 32 mm.

© Siemens AG 2017

Dimensional drawings (continued)

Type of construction IM B35

For flange dimensions, see page 1/39 (**Z** = the number of retaining holes)

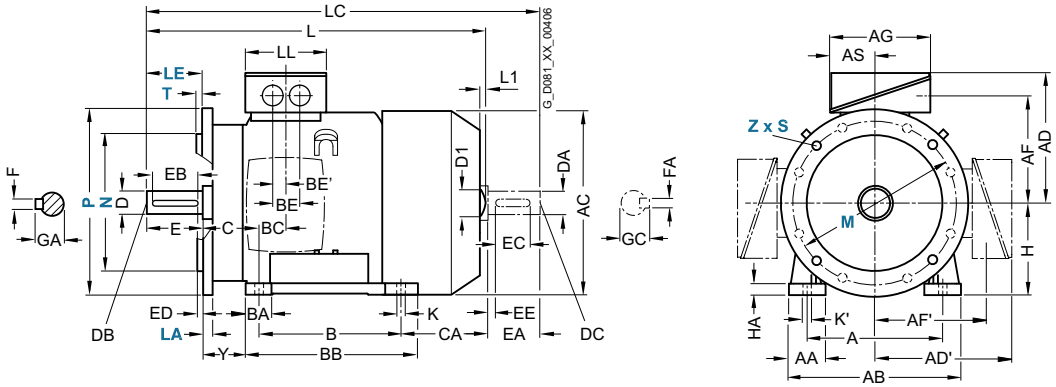

Type of construction IM B14

For flange dimensions, see page 1/39 (**Z** = the number of retaining holes)

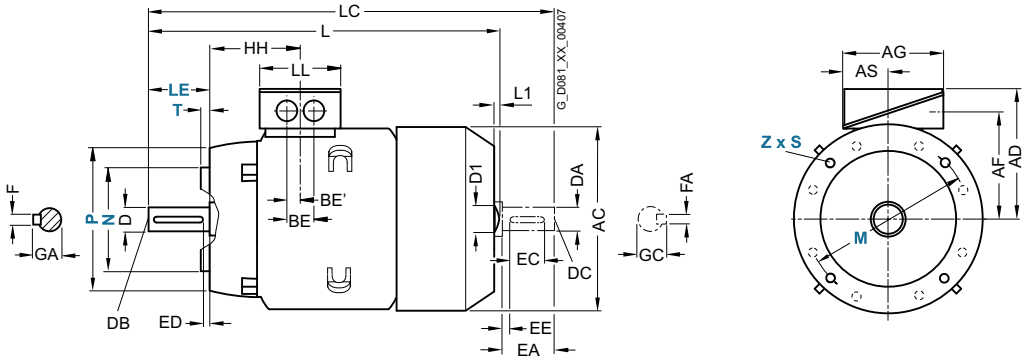

For motor			Dimension designation acc. to **IEC**								DE shaft extension							NDE shaft extension						
Frame size	Motor type	No. of poles	HH	K	K'	L[1)]	L1	D1	LC	LL	D	DB	E	EB	ED	F	GA	DA	DC	EA	EC	EE	FA	GC
80 M	1LE1003-0DA2, -0DB2, -0DC2, -0DA3, -0DB3, -0DC3	2, 4, 6	73	9.5	13.5	292	–	–	343	79	19	M6	40	32	4	6	21.5	19	M6	40	32	4	6	21.5
						327			378															
	1LE1043-0DA2,	2				292																		
	1LE1023-0DA2, -0DB2, -0DC2, -0DA3, -0DB3, -0DC3	2, 4, 6				292			343	123														
						327			378															
90 S	1LE1003-0EA0, -0EB0, -0EC0	2, 4, 6	78.5	10	14	347	–	–	405	79	24	M8	50	40	5	8	27	19	M6	40	32	4	6	21.5
	1LE1043-0EA0,	2																						
	1LE1023-0EA0, -0EB0, -0EC0	2, 4, 6								123														
90 L	1LE1003-0EA4, -0EB4, -0EC4	2, 4, 6	78.5	10	14	387	–	–	445	79	24	M8	50	40	5	8	27	19	M6	40	32	4	6	21.5
	1LE1043-0EA4, -0EB4	2, 4																						
	1LE1023-0EA4, -0EB4, -0EC4	2, 4, 6								123														

[1)] The length is specified as far as the tip of the fan cover.

© Siemens AG 2017

2

Dimensional drawings

Type of construction IM B3

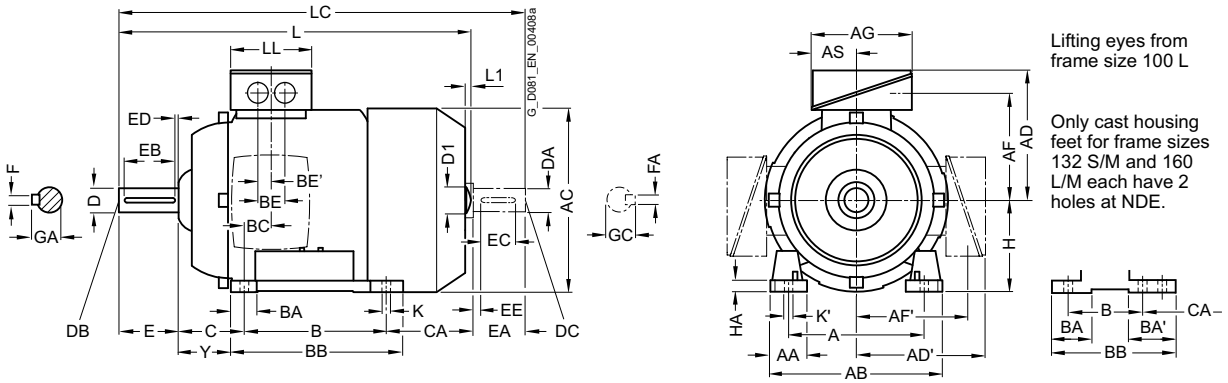

Lifting eyes from frame size 100 L

Only cast housing feet for frame sizes 132 S/M and 160 L/M each have 2 holes at NDE.

Types of construction IM B5 and IM V1

For flange dimensions, see page 1/39 (**Z** = the number of retaining holes)

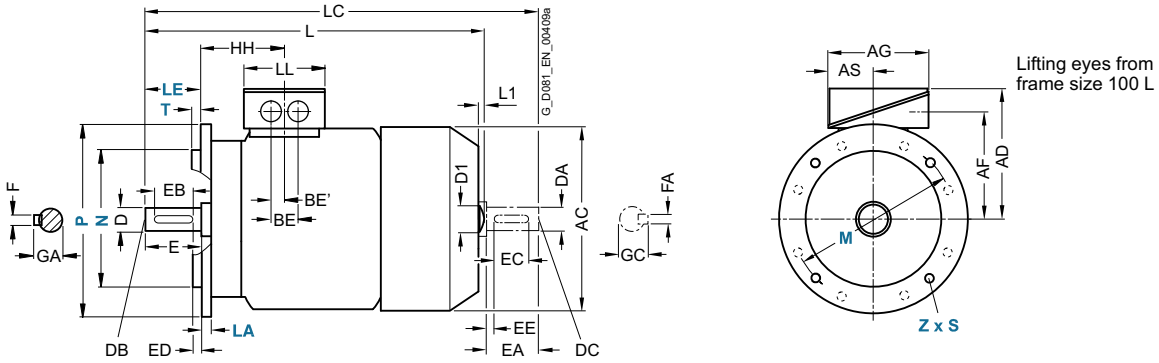

Lifting eyes from frame size 100 L

For motor			Dimension designation acc. to **IEC**																				
Frame size	Motor type 1LE1003-1LE1023-1LE1043	No. of poles	A	AA	AB	AC	AD	AD'	AF	AF'	AG	AS	B	BA	BA'	BB	BC	BE	BE'	C	CA	H	HA	Y
100 L	1AA4, 1AB4, 1AB5, 1AC3	2, 4, 6	160	42	196	198	166	166	125.5	125.5	135	63.5	140	37.5	37.5	176	33.5	50	25	63	176	100	12	45
112 M	1BA2, 1BB2	2, 4, 6	190	46	226	222	177	177	136.5	136.5	135	63.5	140	37.5	37.5	176	26	50	25	70	155	112	12	52
132 S	1CA0, 1CC0, 1CD0	2, 6, 8	216	53	256	262	202	202	159.5	159.5	155	70.5	140	38	76[1]	218[2]	26.5	48	24	89	167	132	15	69
	1CA1, 1CB0	2, 4																			217			
132 M	1CC2	6	216	53	256	262	202	202	159.5	159.5	155	70.5	178	38	76	218	26.5	48	24	89	129	132	15	69
	1CB2, 1CC3, 1CD2	4, 6, 8																			179			
160 M	1DA2, 1DA3, 1DB2, 1DC2, 1DD2, 1DD3	2, 4, 6, 8	254	60	300	314	236.5	236.5	190	190	175	77.5	210	44	89[3]	300[4]	47	57	28.5	108	192	160	18	85
160 L	1DA4, 1DB4, 1DC4, 1DD4	2, 4, 6, 8	254	60	300	314	236.5	236.5	190	190	175	77.5	254	44	89	300	47	57	28.5	108	208	160	18	85
180 M	1EA2 1EB2	2, 4	279	65	339	356	259	259	212.5	212.5	175	77.5	241	80	100	328	30	57	28.5	121	232	180	20	95
180 L	1EB4, 1EC4, 1ED4	4, 6, 8	279	65	339	356	259	259	212.5	212.5	175	77.5	279	80	100	328	30	57	28.5	121	194	180	20	95
200 L	2AA4, 2AA5, 2AB5, 2AC4, 2AC5, 2AD5	2, 4, 6, 8	318	70	378	396	296	296	238	238	225	102.5	305	90	100	355	45	75	37.5	133	202	200	25	108

[1] With screwed-on feet, dimension BA' is 38 mm.

[2] With screwed-on feet, dimension BB is 180 mm.

[3] With screwed-on feet, dimension BA' is 44 mm.

[4] With screwed-on feet, dimension BB is 256 mm.

© Siemens AG 2017

Dimensional drawings (continued)

Type of construction IM B35

For flange dimensions, see page 1/39 (**Z** = the number of retaining holes)

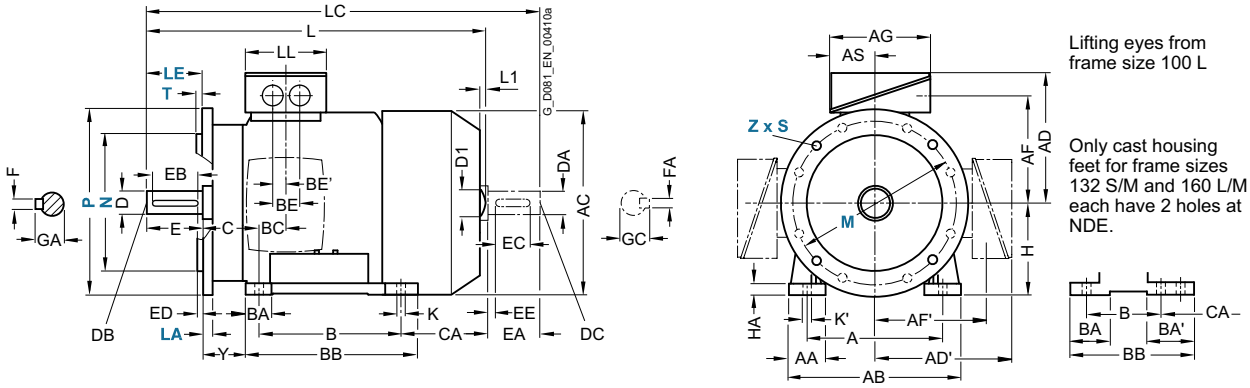

Type of construction IM B14

For flange dimensions, see page 1/39 (**Z** = the number of retaining holes)

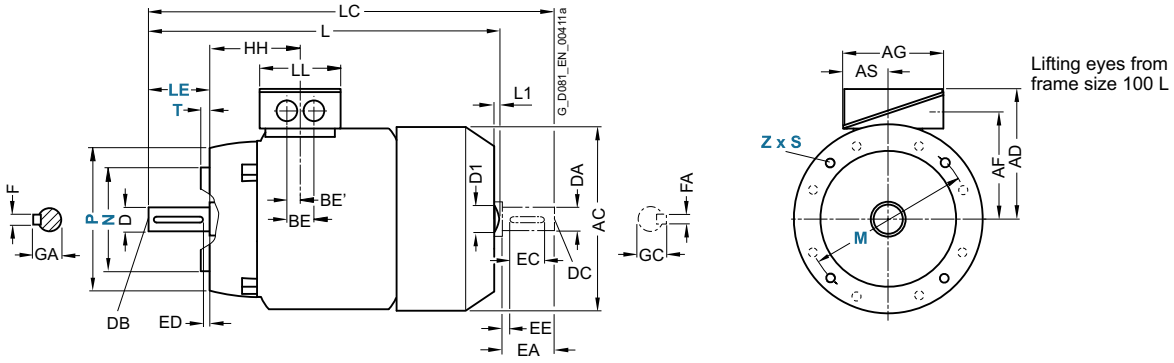

For motor			Dimension designation acc. to **IEC**								DE shaft extension							NDE shaft extension						
Frame size	Motor type 1LE1003- 1LE1023- 1LE1043	No. of poles	HH	K	K'	L[1)]	L1	D1	LC	LL	D	DB	E	EB	ED	F	GA	DA	DC	EA	EC	EE	FA	GC
100 L	1AA4, 1AB4, 1AB5, 1AC3	2, 4, 6	96.5	12	16	430.5	7	32	489	112	28	M10	60	50	5	8	31	24	M8	50	40	5	8	27
112 M	1BA2, 1BB2	2, 4, 6	96	12	16	414	7	32	475	112	28	M10	60	50	5	8	31	24	M8	50	40	5	8	27
132 S	1CA0, 1CC0, 1CD0	2, 6, 8	115.5	12	16	465	8.5	39	535.5	130	38	M12	80	70	5	10	41	28	M10	60	50	5	8	31
	1CA1, 1CB0	2, 4				515			585.5															
132 M	1CC2	6	115.5	12	16	465	8.5	39	535.5	130	38	M12	80	70	5	10	41	28	M10	60	50	5	8	31
	1CB2, 1CC3, 1CD2	4, 6, 8				515			585.5															
160 M	1DA2, 1DA3, 1DB2, 1DC2, 1DD2, 1DD3	2, 4, 6, 8	155	15	19	604	10	45	730	145	42	M16	110	90	10	12	45	42	M16	110	90	10	12	45
160 L	1DA4, 1DB4, 1DC4, 1DD4	2, 4, 6, 8	155	15	19	664	10	45	790	145	42	M16	110	90	10	12	45	42	M16	110	90	10	12	45
180 M	1EA2 1EB2	2, 4	151	14.5	19	698	–	–	814	145	48	M16	110	100	5	14	52	48	M16	110	100	5	14	52
180 L	1EB4, 1EC4, 1ED4	4, 6, 8	151	14.5	19	698	–	–	814	145	48	M16	110	100	5	14	52	48	M16	110	100	5	14	52
200 L	2AA4, 2AA5, 2AB5, 2AC4, 2AC5, 2AD5	2, 4, 6, 8	178	18.5	25	746	–	–	860	185	55	M20	110	100	5	16	59	55	M20	110	100	5	16	59

[1)] The length is specified as far as the tip of the fan cover.

© Siemens AG 2017

2

Dimensional drawings

Type of construction IM B3

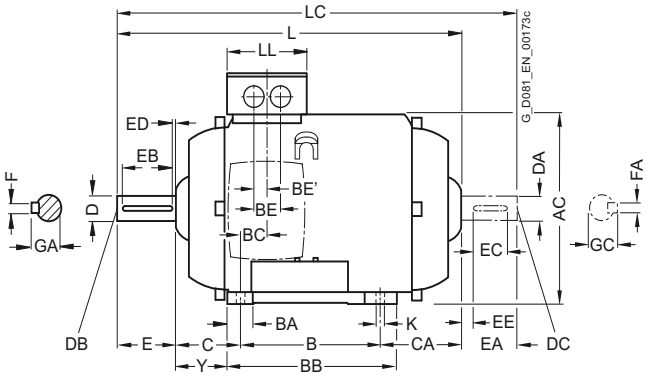

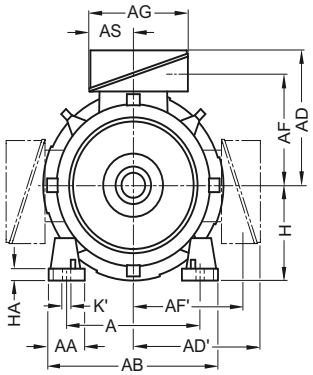

Lifting eyes from frame size 100 L

Only cast housing feet for frame sizes 132 S/M and 160 L/M each have 2 holes at NDE.

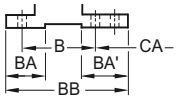

Types of construction IM B5 and IM V1

For flange dimensions, see page 1/39 (**Z** = the number of retaining holes)

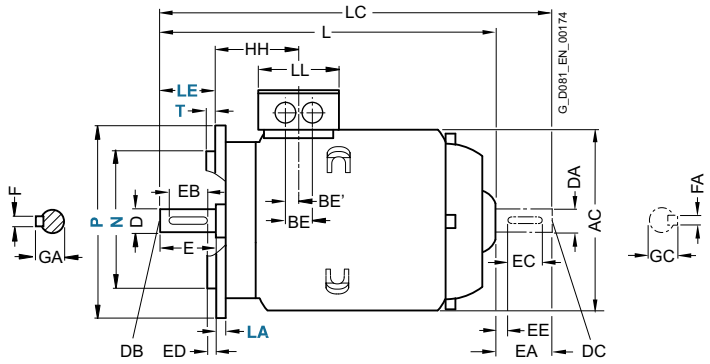

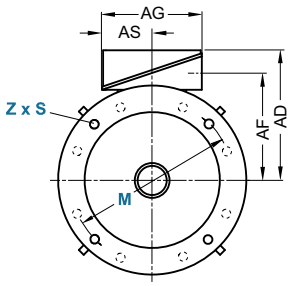

Lifting eyes from frame size 100 L

For motor			Dimension designation acc. to **IEC**																				
Frame size	Motor type 1LE1023- 1LE1043-	No. of poles	A	AA	AB	AC	AD	AD'	AF	AF'	AG	AS	B	BA	BA'	BB	BC	BE	BE'	C	CA	H	HA	Y
80 M	0DA2, 0DB2, 0DC2	2, 4, 6	125	30.5	150	159	121.5	121.5	96.5	96.5	93	43	100	32	32	118	23	–	18[1]	50	70	80	8	41
	0DA3, 0DB3, 0DC3	2, 4, 6																			105.5			
90 S	0EA0, 0EB0, 0EC0	2, 4, 6	140	30.5	165	178	126	126	101.5	101.5	93	43	100	33	54	143	22.5	–	18[1]	56	113	90	10	47
90 L	0EA4, 0EB4, 0EC4	2, 4, 6	140	30.5	165	178	126	126	101.5	101.5	93	43	100	33	54	143	22.5	–	18[1]	56	153	90	10	47

[1] Only one termination hole available.

© Siemens AG 2017

Dimensional drawings (continued)

Type of construction IM B35

For flange dimensions, see page 1/39 (**Z** = the number of retaining holes)

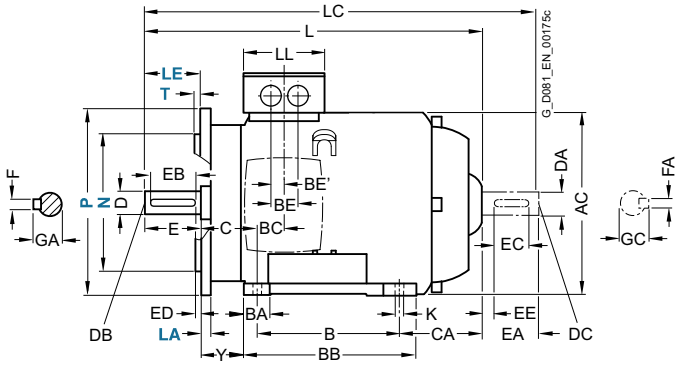

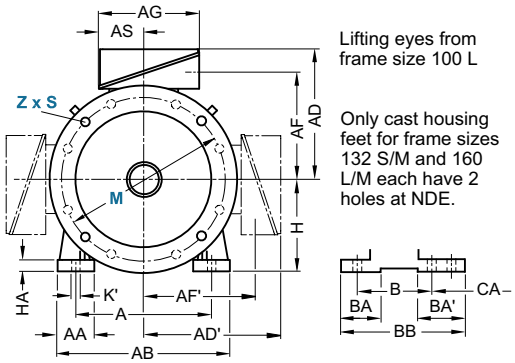

Lifting eyes from frame size 100 L

Only cast housing feet for frame sizes 132 S/M and 160 L/M each have 2 holes at NDE.

Type of construction IM B14

For flange dimensions, see page 1/39 (**Z** = the number of retaining holes)

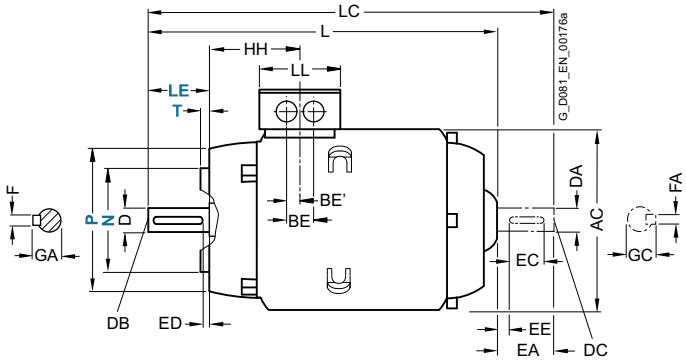

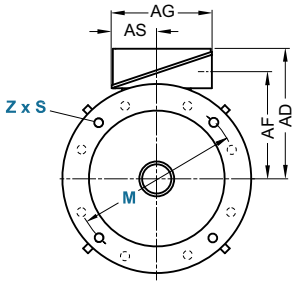

Lifting eyes from frame size 100 L

For motor			Dimension designation acc. to **IEC**						DE shaft extension							NDE shaft extension						
Frame size	Motor type 1LE1023-1LE1043-	No. of poles	HH	K	K'	L	LC	LL	D	DB	E	EB	ED	F	GA	DA	DC	EA	EC	EE	FA	GC
80 M	0DA2, 0DB2, 0DC2	2, 4, 6	73	9.5	13.5	253.5	300.5	79	19	M6	40	32	4	6	21.5	19	M6	40	32	4	6	21.5
	0DA3, 0DB3, 0DC3	2, 4, 6				288	335.5															
90 S	0EA0, 0EB0, 0EC0	2, 4, 6	78.5	10	14	294.5	349	79	19	M6	40	32	5	8	27	19	M6	40	32	4	6	21.5
90 L	0EA4, 0EB4, 0EC4	2, 4, 6	78.5	10	14	334.5	389	79	19	M6	40	32	5	8	27	19	M6	40	32	4	6	21.5

© Siemens AG 2017

2

Dimensional drawings

Type of construction IM B3

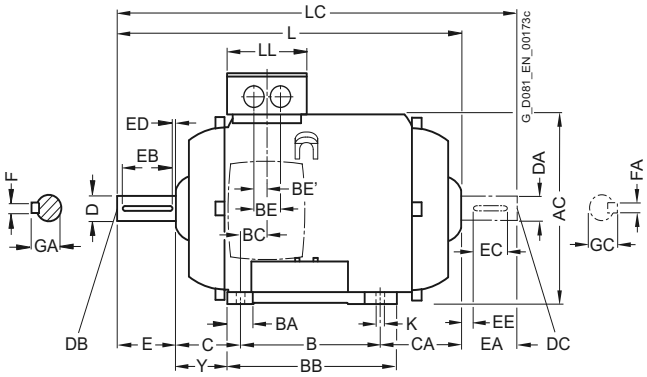

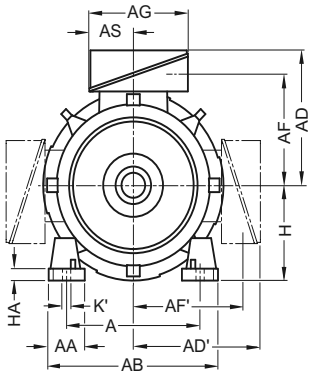

Lifting eyes from frame size 100 L

Only cast housing feet for frame sizes 132 S/M and 160 L/M each have 2 holes at NDE.

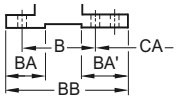

Types of construction IM B5 and IM V1

For flange dimensions, see page 1/39 (**Z** = the number of retaining holes)

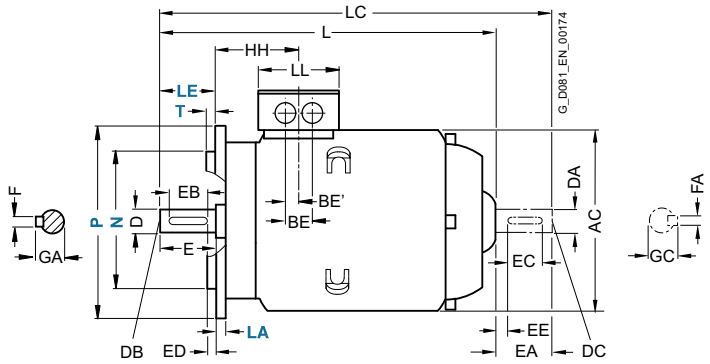

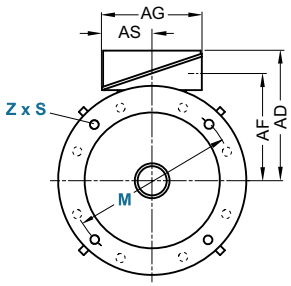

Lifting eyes from frame size 100 L

For motor			Dimension designation acc. to **IEC**																				
Frame size	Motor type 1LE1023-1LE1043-	No. of poles	A	AA	AB	AC	AD	AD'	AF	AF'	AG	AS	B	BA	BA'	BB	BC	BE	BE'	C	CA	H	HA	Y
100 L	1AA4, 1AB4, 1AB5	2, 4	160	42	196	198	166	166	125.5	125.5	135	63.5	140	37.5	37.5	176	33.5	50	25	63	–	100	12	45
	1AC3	6																						
112 M	1BA2, 1BB2	2, 4	190	46	226	222	177	177	136.5	136.5	135	63.5	140	37.5	37.5	176	26	50	25	70	–	112	12	52
132 S	1CA0, 1CC0	2, 6	216	53	256	262	202	202	159.5	159.5	155	70.5	140	38	76[1]	218[2]	26.5	48	24	89	–	132	15	69
	1CA1, 1CB0	2, 4																						
132 M	1CC2	6	216	53	256	262	202	202	159.5	159.5	155	70.5	178	38	76	218	26.5	48	24	89	–	132	15	69
	1CB2, 1CC3	4, 6																						
160 M	1DA2, 1DA3, 1DB2, 1DC2	2, 4, 6	254	60	300	314	236.5	236.5	190	190	175	77.5	210	44	89[3]	300[4]	47	57	28.5	108	–	160	18	85
160 L	1DA4, 1DB4, 1DC4	2, 4, 6	254	60	300	314	236.5	236.5	190	190	175	77.5	254	44	89	300	47	57	28.5	108	–	160	18	85
180 M	1EA2, 1EB2,	2, 4	279	65	339	356	259	259	212.5	212.5	175	77.5	241	80	100	328	30	57	28.5	121	–	180	20	95
180 L	1EB4, 1EC4	4, 6	279	65	339	356	259	259	212.5	212.5	175	77.5	279	80	100	328	30	57	28.5	121	–	180	20	95
200 L	2AA4, 2AA5, 2AB5, 2AC4, 2AC5	2, 4, 6	318	70	378	396	296	296	238	238	225	102.5	305	90	100	355	45	75	37.5	133	–	200	25	108

[1] With screwed-on feet, dimension BA' is 38 mm.
[2] With screwed-on feet, dimension BB is 180 mm.
[3] With screwed-on feet, dimension BA' is 44 mm.
[4] With screwed-on feet, dimension BB is 256 mm.

© Siemens AG 2017

Dimensional drawings (continued)

Type of construction IM B35

For flange dimensions, see page 1/39 (**Z** = the number of retaining holes)

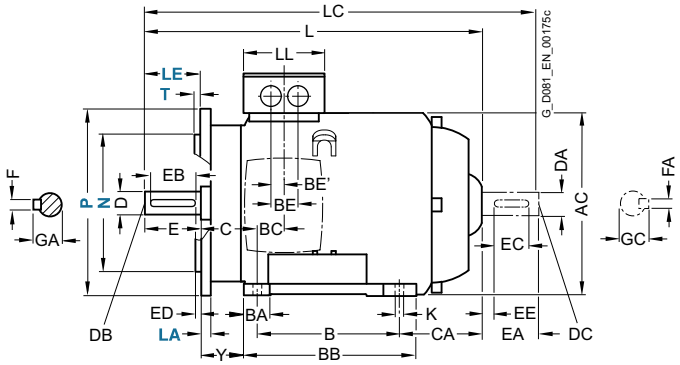

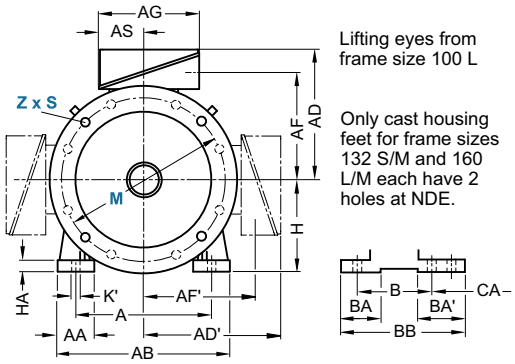

Lifting eyes from frame size 100 L

Only cast housing feet for frame sizes 132 S/M and 160 L/M each have 2 holes at NDE.

Type of construction IM B14

For flange dimensions, see page 1/39 (**Z** = the number of retaining holes)

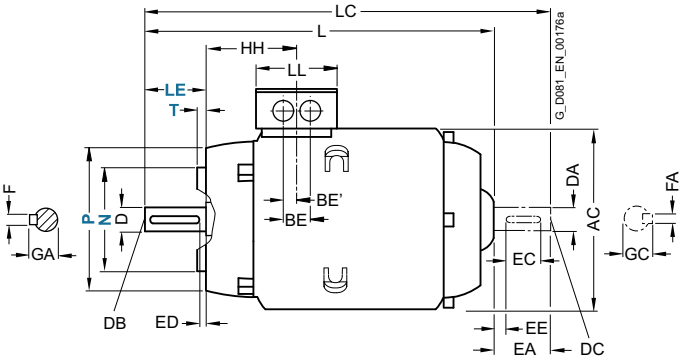

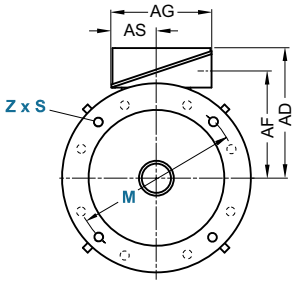

Lifting eyes from frame size 100 L

For motor			Dimension designation acc. to **IEC**						DE shaft extension							NDE shaft extension						
Frame size	Motor type 1LE1023-1LE1043-	No. of poles	HH	K	K'	L	LC	LL	D	DB	E	EB	ED	F	GA	DA	DC	EA	EC	EE	FA	GC
100 L	1AA4, 1AB4, 1AB5 1AC3	2, 4	96.5	12	16	356.5	411	112	28	M10	60	50	5	8	31	24	M8	50	40	5	8	27
		6																				
112 M	1BA2, 1BB2	2, 4	96	12	16	336	390	112	28	M10	60	50	5	8	31	24	M8	50	40	5	8	27
132 S	1CA0, 1CC0	2, 6	115.5	12	16	380.5	446	130	38	M12	80	70	5	10	41	28	M10	60	50	5	8	31
	1CA1, 1CB0	2, 4				430.5	496									–	–	–	–	–	–	–
132 M	1CC2	6	115.5	12	16	380.5	446	130	38	M12	80	70	5	10	41	28	M10	60	50	5	8	31
	1CB2, 1CC3	4, 6				430.5	496									–	–	–	–	–	–	–
160 M	1DA2, 1DA3, 1DB2, 1DC2	2, 4, 6	155	15	19	510	630	145	42	M16	110	90	10	12	45	42	M16	110	90	10	12	45
160 L	1DA4, 1DB4, 1DC4	2, 4, 6	155	15	19	570	690	145	42	M16	110	90	10	12	45	42	M16	110	90	10	12	45
180 M	1EA2, 1EB2	2, 4	151	14.5	19	698	706	145	48	M16	110	100	5	14	52	48	M16	110	100	5	14	52
180 L	1EB4, 1EC4	4, 6	151	14.5	19	698	706	145	48	M16	110	100	5	14	52	48	M16	110	100	5	14	52
200 L	2AA4, 2AA5, 2AB5, 2AC4, 2AC5	2, 4, 6	178	18.5	25	746	759	185	55	M20	110	100	5	16	59	55	M20	110	100	5	16	59

© Siemens AG 2017

Overview (continued)

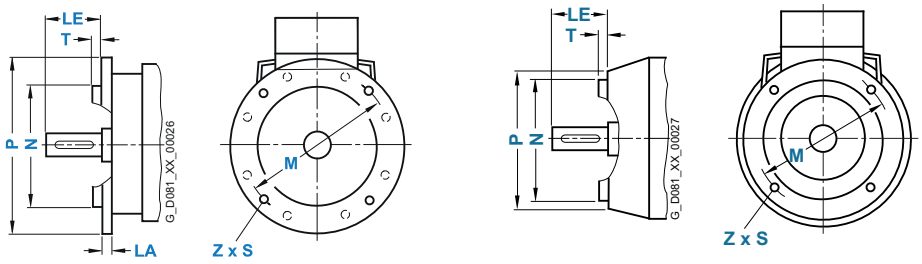

In EN 50347, the frame sizes are allocated flange FF with through holes and flange FT with tapped holes.
The designation of flange A and C according to DIN 42948 (invalid since September 2003) are also listed for information purposes. See the table below. (**Z** = the number of retaining holes)

Frame size	Type of construction	Flange type	Flange with through holes (**FF**/A) Flange with tapped holes (**FT**/C)		Dimension designation acc. to **IEC**							
			Acc. to EN 50347	Acc. to DIN 42948	**LA**	**LE**	**M**	**N**	**P**	**S**	**T**	**Z**
71 M	IM B5, IM B35, IM V1, IM V3	Standard flange	**FF130**	A 160	5	30	130	110	160	10	3.5	4
	IM B14, IM B34, IM V18, IM V19	Standard flange	**FT85**	C 105	–	30	85	70	105	M6	2.5	4
	IM B14, IM B34, IM V18, IM V19	Next larger standard flange [1] – Order code **P01**	**FT115**	C 140	–	30	115	95	140	M8	3	4
80 M	IM B5, IM B35, IM V1, IM V3	Standard flange	**FF165**	A 200	10	40	165	130	200	12	3.5	4
	IM B14, IM B34, IM V18, IM V19	Standard flange	**FT100**	C 120	–	40	100	80	120	M6	3	4
	IM B14, IM B34, IM V18, IM V19	Next larger standard flange [1] – Order code **P01**	**FT130**	C 160	–	40	130	110	160	M8	3.5	4
90 S/L	IM B5, IM B35, IM V1, IM V3	Standard flange	**FF165**	A 200	10	50	165	130	200	12	3.5	4
	IM B14, IM B34, IM V18, IM V19	Standard flange	**FT115**	C 140	–	50	115	95	140	M8	3	4
	IM B14, IM B34, IM V18, IM V19	Next larger standard flange – Order code **P01**	**FT130**	C 160	–	50	130	110	160	M8	3.5	4
100 L	IM B5, IM B35, IM V1, IM V3	Standard flange	**FF215**	A 250	11	60	215	180	250	14.5	4	4
	IM B5, IM B35, IM V1, IM V3	Next larger standard flange – Order code **P01**	**FF265**	A 300	12	60	265	230	300	14.5	4	4
	IM B5, IM B35, IM V1, IM V3	Next smaller standard flange – Order code **P02**	**FF165**	A 200	11	60	165	130	200	12	3.5	4
	IM B14, IM B34, IM V18, IM V19	Standard flange	**FT130**	C 160	–	60	130	110	160	M8	3.5	4
	IM B14, IM B34, IM V18, IM V19	Next larger standard flange – Order code **P01**	**FT165**	C 200	–	60	165	130	200	M10	3.5	4
112 M	IM B5, IM B35, IM V1, IM V3	Standard flange	**FF215**	A 250	11	60	215	180	250	14.5	4	4
	IM B5, IM B35, IM V1, IM V3	Next larger standard flange – Order code **P01**	**FF265**	A 300	12	60	265	230	300	14.5	4	4
	IM B5, IM B35, IM V1, IM V3	Next smaller standard flange – Order code **P02**	**FF165**	A 200	11	60	165	130	200	12	3.5	4
	IM B14, IM B34, IM V18, IM V19	Standard flange	**FT130**	C 160	–	60	130	110	160	M8	3.5	4
	IM B14, IM B34, IM V18, IM V19	Next larger standard flange – Order code **P01**	**FT165**	C 200	–	60	165	130	200	M10	3.5	4
132 S/M	IM B5, IM B35, IM V1, IM V3	Standard flange	**FF265**	A 300	12	80	265	230	300	14.5	4	4
	IM B5, IM B35, IM V1, IM V3	Next larger standard flange – Order code **P01**	**FF300**	A 350	13	80	300	250	350	18.5	5	4
	IM B5, IM B35, IM V1, IM V3	Next smaller standard flange – Order code **P02**	**FF215**	A 250	11	80	215	180	250	14.5	4	4
	IM B14, IM B34, IM V18, IM V19	Standard flange	**FT165**	C 200	–	80	165	130	200	M10	3.5	4
	IM B14, IM B34, IM V18, IM V19	Next larger standard flange – Order code **P01**	**FT215**	C 250	–	80	215	180	250	M12	4	4
160 M/L	IM B5, IM B35, IM V1, IM V3	Standard flange	**FF300**	A 350	13	110	300	250	350	18.5	5	4
	IM B5, IM B35, IM V1, IM V3	Next smaller standard flange – Order code **P02**	**FF265**	A 300	12	110	265	230	300	14.5	4	4
	IM B14, IM B34, IM V18, IM V19	Standard flange	**FT215**	C 250	–	110	215	180	250	M12	4	4
180 M/L	IM B5, IM B35, IM V1, IM V3	Standard flange	**FF300**	A 350	13	110	300	250	350	18.5	5	4
	IM B5, IM B35, IM V1, IM V3	Next smaller standard flange – Order code **P02**	**FF 265**	A 300	12	110	265	230	300	14.5	4	4
200 L	IM B5, IM B35, IM V1, IM V3	Standard flange	**FF350**	A 400	15	110	350	300	400	18.5	5	4
	IM B5, IM B35, IM V1, IM V3	Next smaller standard flange – Order code **P02**	**FF300**	A 350	13	110	300	250	350	18.5	5	4
225 S/M 2-pole 4 to 8-pole	IM B5, IM B35, IM V1, IM V3	Standard flange	**FF400**	A 450	16	110 140	400	350	450	18.5	5	8
250 M	IM B5, IM B35, IM V1, IM V3	Standard flange	**FF500**	A 550	18	140	500	450	550	18.5	5	8
280 S/M	IM B5, IM B35, IM V1, IM V3	Standard flange	**FF500**	A 550	18	140	500	450	550	18.5	5	8
315 S/M/L 2-pole 4 to 8-pole	IM B5, IM B35, IM V1, IM V3	Standard flange	**FF600**	A 660	22	140 170	600	550	660	24	6	8

[1] With reference to standard EN 50347, flanges that are 2 steps larger are used with option **P01** in the frame sizes 71 and 80.